Contents

Part 1 Summarization 2
Part 2 Nomenclature and External Appearance.....3
Part 3 Specification.....4
Part 4 Capacity Tables 8
Part 5 Dimension.....14
Part 6 Wiring Diagram.....16
Part 7 Unit Installation, Operation and Maintenance...17
Part 8 Exploded view 20
Part 9 Control.....32

Part 1 Summarization

MKH is a type of fan coil unit available in versions with casing and versions for building-in suitable for vertical installation and ceiling installation, air return from front or below. MKH series fan coil is designed and manufactured on the base of fully adoption advanced technology. The acute and thin body makes it save a lot of space and easy for installation. Quality materials and state-of-the-art technology ensure optimal performance with virtually imperceptible noise levels and keep running smoothly.

Midea MKH series fan coil unit has been tested by national AC quality supervise testing center, as low noise level, high efficiency, stable operation and low power consumption make it as the advanced production in the world, and it is recommended for users by CRRA (China Refrigeration And Air-Conditioner Industry Association). Due to their reduced dimensions and pleasing design, these units are ideally suited for Commercial and Residential environments.

Features

- ✧ Full compliance with safety regulations
- ✧ Soft, flowing lines
- ✧ Broad range of controls
- ✧ Low noise operation
- ✧ Reduced pressure drops across heat exchangers
- ✧ Easy installation and maintenance
- ✧ Air filter easily removed and cleaned
- ✧ Removable blades for easy and effective cleaning
- ✧ Low single fans direct driven by single phase, 4 speed permanent split capacitor motor.
- ✧ Copper tube/aluminum fin coils
- ✧ Hydrophilic aluminum fin coils coated (optional)
- ✧ Unit constructed by electrostatic galvanized sheet, providing maximum protection against corrosion
- ✧ Heavy gauge zinc coated steel drainage pan with good insulation processing, avoiding sweating and corrosion
- ✧ Unit tested performance complies with **IEC 60335-2-40-2002**,EUROVENT6/C/002-2007.

Part 2 Nomenclature and External Appearance

1. Nomenclature

M K H □ — □

- Air Volume(CFM)
- 1 Unit with casing,with air intake from front
  2 Unit with casing,with air intake from below
  3 Unit of concealed version
- H Ceiling and Floor Type
- Chilled Water Fan coil unit
- Midea

2. External Appearance

H1 Type

H2 Type

H3 Type

Part 3 Specification

MKH1, MKH2 Type:

TYPE			MKH1(2)-150	MKH1(2)-250	MKH1(2)-300	MKH1(2)-400	MKH1(2)-450
Airflow	High speed	CFM	150	250	300	400	450
		m^3/h	255	425	510	680	765
	Mid speed	CFM	126	224	257	333	389
		m^3/h	214	380	436	565	660
	Low speed	CFM	109	198	210	287	330
		m^3/h	185	337	356	488	561
Cooling Capacity		W	1150	1870	2530	3270	3970
		Btu/h	3925	6380	8630	11160	13550
Heating Capacity		W	1520	2530	3490	4580	5640
		Btu/h	5185	8630	11900	15625	19250
Noise	High speed	dB(A)	32	35	37	39	41
	Mid speed	dB(A)	30	32	34	36	38
	Low speed	dB(A)	28	29	30	33	34
Water flow		LPH	197.8	321.6	435.2	556	671
Water resistance		kPa	18.3	10.1	14.2	9.5	10.3
Indoor coil	Number of rows		3	3	2	2	3
	Tube pitch(a)x row pitch(b)	mm	25.4×22	25.4×22	25.4×22	25.4×22	25.4×22
	Fin spacing	mm	1.8	1.8	1.8	1.8	1.8
	Fin type		Unhydrophilic aluminium				
	Tube outside dia. and type	mm	φ9.53 bare tube				
	Coil length x height x width	mm	409×66×254	409×66×254	609×44×254	609×44×254	809×66×254
	Number of circuits		2	2	2	2	3
Fan motor	Number		1	1	1	1	1
	Model		YDK8-6	YDK15-4A	YSK18-4K	YSK18-4K	YSK20-6A-1
	Brand		WELLING	WELLING	WELLING	WELLING	YONGAN
	Input	W	29	30	44	47	36
	Capacitor	uF	1.0	1.0	1.2	2.0	2.0
	Speed	r/min	660	970	760	890	750
Indoor unit	Dimension (W×H×D)	mm	800×626×225	800×626×220	1000×626×225	1000×626×225	1200×626×225
	Packing (W×H×D)	mm	889×722×312	889×722×312	1089×722×312	1089×722×312	1289×722×312
	Net/Gross weight	kg	22.5/26.5	22.5/26.5	26/31	26/31	32.5/38
Control mode			wired control				
Pipe	Water-inlet pipe		3/4G	3/4G	3/4G	3/4G	3/4G
	Water-return pipe		3/4G	3/4G	3/4G	3/4G	3/4G
	Condensation water-outlet pipe		φ16mm	φ16mm	φ16mm	φ16mm	φ16mm

Remark:

1. All performance data above is based upon 0Pa ambient static pressure.
2. Cooling capacity test condition: air inlet Temp. : 27DB℃/19 WB℃, water inlet Temp. 7℃, water Temp. difference 5℃.
3. Heating capacity test condition: air inlet Temp. : 21DB℃, water inlet Temp. 60℃, the volume of air and water is same as cooling.
4. Noise level is tested in full-anechoic room.

MKH1, MKH2 Type:

TYPE			MKH1(2)-500	MKH1(2)-600	MKH1(2)-800	MKH1(2)-900
Airflow	High speed	CFM	500	600	800	900
		m^3/h	850	1020	1360	1530
	Mid speed	CFM	459	494	680	811
		m^3/h	777	839	1155	1377
	Low speed	CFM	353	410	476	707
		m^3/h	600	697	808	1200
Cooling Capacity		W	4850	5640	6520	7850
		Btu/h	16550	19245	22200	26800
Heating Capacity		W	6980	8230	9580	11690
		Btu/h	23815	28080	32685	39885
Noise	High speed	dB(A)	43	44	46	48
	Mid speed	dB(A)	39	40	42	45
	Low speed	dB(A)	35	37	38	42
Water flow		LPH	834.2	970.2	1131.2	1350.2
Water resistance		kPa	24.6	11.4	9.5	12.1
Indoor coil	Number of rows		3	2	2	2
	Tube pitch(a)x row pitch(b)	mm	25.4×22	25.4×22	25.4×22	25.4×22
	Fin spacing	mm	1.8	1.8	1.8	1.8
	Fin type		Unhydrophilic aluminium			
	Tube outside dia. and type	mm	φ9.53 bare tube			
	Coil length x height x width	mm	809×66×254	1109×44×254	1109×44×254	1109×44×254
	Number of circuits		2	2	2	2
Fan motor	Number		1	1	1	1
	Model		YSK27-4A	YSK35-4C	YSK74-4H	YSK125-4CC
	Brand		WELLING	WELLING	YONGAN	WELLING
	Input	W	51	64	97	143
	Capacitor	uF	2.5	2.5	3.0	3.0
	Speed	r/min	830	750	1000	1140
Indoor unit	Dimension (W×H×D)	mm	1200×626×225	1500×626×225	1500×626×225	1500×626×225
	Packing (W×H×D)	mm	1289×722×312	1589×722×312	1589×722×312	1589×722×312
	Net/Gross weight	kg	32.5/38	39/45	39/45	39/45
Control mode			wired control			
Pipe	Water-inlet pipe		3/4G	3/4G	3/4G	3/4G
	Water-return pipe		3/4G	3/4G	3/4G	3/4G
	Condensation water-outlet pipe		φ16mm	φ16mm	φ16mm	φ16mm

Remark:

1. All performance data above is based upon 0Pa ambient static pressure.
2. Cooling capacity test condition: air inlet Temp. : 27DB℃/19 WB℃, water inlet Temp. 7℃, water Temp. difference 5℃.
3. Heating capacity test condition: air inlet Temp. : 21DB℃, water inlet Temp. 60℃, the volume of air and water is same as cooling.
4. Noise level is tested in full-anechoic room.

MKH3 Type:

TYPE			MKH3-150	MKH3-250	MKH3-300	MKH3-400	MKH3-450
Airflow	High speed	CFM	150	250	300	400	450
		m^3/h	255	425	510	680	765
	Mid speed	CFM	126	224	257	333	389
		m^3/h	214	376	404	554	609
	Low speed	CFM	109	198	210	287	330
		m^3/h	185	343	323	458	408
Cooling Capacity		W	1150	1870	2530	3270	3970
		Btu/h	3925	6380	8630	11160	13550
Heating Capacity		W	1520	2530	3490	4580	5640
		Btu/h	5185	8630	11900	15625	19250
Noise	High speed	dB(A)	32	35	37	39	41
	Mid speed	dB(A)	30	32	34	36	38
	Low speed	dB(A)	28	29	30	33	34
Water flow		LPH	197.8	321.6	435.2	556	671
Water resistance		kPa	18.3	10.1	14.2	9.5	10.3
Indoor coil	Number of rows		3	3	2	2	3
	Tube pitch(a)x row pitch(b)	mm	25.4×22	25.4×22	25.4×22	25.4×22	25.4×22
	Fin spacing	mm	1.8	1.8	1.8	1.8	1.8
	Fin type		Unhydrophilic aluminium				
	Tube outside dia. and type	mm	φ9.53 bare tube				
	Coil length x height x width	mm	409×66×254	409×66×254	609×44×254	609×44×254	809×66×254
	Number of circuits		2	2	2	2	3
Fan motor	Number		1	1	1	1	1
	Model		YDK8-6	YDK15-4A	YSK18-4K	YSK18-4K	YSK20-6A-1
	Brand		WELLING	WELLING	WELLING	WELLING	YONGAN
	Input	W	29	30	44	47	36
	Capacitor	uF	1.0	1.0	1.2	2.0	2.0
	Speed	r/min	660	970	760	890	750
Indoor unit	Dimension (W×H×D)	mm	550×545×212	550×545×212	750×545×212	750×545×212	950×545×212
	Packing (W×H×D)	mm	795×640×305	795×640×305	995×640×305	995×640×305	1039×639×305
	Net/Gross weight	kg	17/19	17/19	20/23	20/23	25/29
Control mode			wired control				
Pipe	Water-inlet pipe		3/4G	3/4G	3/4G	3/4G	3/4G
	Water-return pipe		3/4G	3/4G	3/4G	3/4G	3/4G
	Condensation water-outlet pipe		φ16mm	φ16mm	φ16mm	φ16mm	φ16mm

Remark:

1. All performance data above is based upon 0Pa ambient static pressure.
2. Cooling capacity test condition: air inlet Temp. : 27DB℃/19 WB℃, water inlet Temp. 7℃, water Temp. difference 5℃.
3. Heating capacity test condition: air inlet Temp. : 21DB℃, water inlet Temp. 60℃, the volume of air and water is same as cooling.
4. Noise level is tested in full-anechoic room.

MKH3 Type:

TYPE			MKH3-500	MKH3-600	MKH3-800	MKH3-900
Airflow	High speed	CFM	500	600	800	900
		m^3/h	850	1020	1360	1530
	Mid speed	CFM	459	494	680	811
		m^3/h	756	790	1058	1364
	Low speed	CFM	353	410	476	707
		m^3/h	535	589	880	1148
Cooling Capacity		W	4850	5640	6520	7850
		Btu/h	16550	19245	22200	26800
Heating Capacity		W	6980	8230	9580	11690
		Btu/h	23815	28080	32685	39885
Noise	High speed	dB(A)	43	44	46	48
	Mid speed	dB(A)	39	40	42	45
	Low speed	dB(A)	35	37	38	42
Water flow		LPH	834.2	970.2	1131.2	1350.2
Water resistance		kPa	24.6	11.4	9.5	12.1
Indoor coil	Number of rows		3	2	2	2
	Tube pitch(a)x row pitch(b)	mm	25.4×22	25.4×22	25.4×22	25.4×22
	Fin spacing	mm	1.8	1.8	1.8	1.8
	Fin type		Unhydrophilic aluminium			
	Tube outside dia. and type	mm	φ9.53 bare tube			
	Coil length x height x width	mm	809×66×254	1109×44×254	1109×44×254	1109×44×254
	Number of circuits		2	2	2	2
Fan motor	Number		1	1	1	1
	Model		YSK27-4A	YSK35-4C	YSK74-4H	YSK125-4CC
	Brand		WELLING	WELLING	YONGAN	WELLING
	Input	W	51	64	97	143
	Capacitor	uF	2.5	2.5	3.0	3.0
	Speed	r/min	830	750	1000	1140
Indoor unit	Dimension (W×H×D)	mm	950×545×212	1250×545×212	1250×545×212	1250×545×212
	Packing (W×H×D)	mm	1039×639×305	1495×640×305	1495×640×305	1495×640×305
	Net/Gross weight	kg	25/29	32/36	32/36	32/36
Control mode			wired control			
Pipe	Water-inlet pipe		3/4G	3/4G	3/4G	3/4G
	Water-return pipe		3/4G	3/4G	3/4G	3/4G
	Condensation water-outlet pipe		φ16mm	φ16mm	φ16mm	φ16mm

Remark:

1. All performance data above is based upon 0Pa ambient static pressure.
2. Cooling capacity test condition: air inlet Temp. : 27DB℃/19 WB℃, water inlet Temp. 7℃, water Temp. difference 5℃.
3. Heating capacity test condition: air inlet Temp. : 21DB℃, water inlet Temp. 60℃, the volume of air and water is same as cooling.
4. Noise level is tested in full-anechoic room.

Part 4 Capacity Tables

Cooling Capacity:

Model	Speed	Air On FCU		Water		Delta Water Temp.	ESP	Speed of Fan	Air Flow	Air Off FCU		Capacity		Water Flow	Water Pressure Drop	Weight	Input	
		DB	WB	EWT	LWT					DB	WB	Total	Sens.				PWR	Fan Motors
		℃	℃	℃	℃	℃	Pa	rpm	m^3/h	℃	℃	kW	kW	m^3/h	kPa	kg	W	nos.
MKH1-150 MKH2-150 MKH3-150	High	26.7	19.4	7	12	5	0	660	255	14.6	13.9	1.12	0.77	0.19	2.84	22.5	22	1
				5.5	14.5	9	0	660	255	17.6	16.6	0.62	0.42	0.10	0.71	22.5	22	1
		27	19	7	12	5	0	660	255	14.6	13.6	1.07	0.79	0.18	2.63	22.5	22	1
				5.5	14.5	9	0	660	255	17.1	16.2	0.59	0.43	0.09	0.66	22.5	22	1
		29	21	7	12	5	0	660	255	15	14	1.38	0.88	0.24	3.97	22.5	22	1
				5.5	14.5	9	0	660	255	18.4	17.4	0.76	0.48	0.12	0.99	22.5	22	1
	Mid	26.7	19.4	7	12	5	0	600	214	14.2	13.2	0.98	0.71	0.16	2.25	22.5	21	1
				5.5	14.5	9	0	600	214	17	16.2	0.54	0.39	0.08	0.56	22.5	21	1
		27	19	7	12	5	0	600	214	14	13.1	0.93	0.73	0.15	2.08	22.5	21	1
				5.5	14.5	9	0	600	214	16.9	16	0.51	0.40	0.08	0.52	22.5	21	1
		29	21	7	12	5	0	600	214	14.2	13.3	1.19	0.8	0.19	3.15	22.5	21	1
				5.5	14.5	9	0	600	214	18	17.1	0.65	0.44	0.10	0.79	22.5	21	1
	Low	26.7	19.4	7	12	5	0	550	185	13.6	12.7	0.93	0.67	0.15	2.08	22.5	20	1
				5.5	14.5	9	0	550	185	17	16	0.51	0.37	0.08	0.52	22.5	20	1
		27	19	7	12	5	0	550	185	13.8	12.9	0.89	0.69	0.14	1.92	22.5	21	1
				5.5	14.5	9	0	550	185	16.7	15.7	0.49	0.38	0.07	0.48	22.5	20	1
		29	21	7	12	5	0	550	185	13.5	12.6	1.14	0.76	0.18	2.91	22.5	20	1
				5.5	14.5	9	0	550	185	17.6	16.7	0.63	0.42	0.09	0.73	22.5	20	1
MKH1-250 MKH2-250 MKH3-250	High	26.7	19.4	7	12	5	0	970	425	14.6	13.9	1.85	1.32	0.32	5.35	22.5	47	1
				5.5	14.5	9	0	970	425	17.6	16.6	1.02	0.73	0.16	1.34	22.5	47	1
		27	19	7	12	5	0	970	425	14.6	13.6	1.77	1.37	0.3	4.96	22.5	47	1
				5.5	14.5	9	0	970	425	17.1	16.2	0.97	0.75	0.15	1.24	22.5	47	1
		29	21	7	12	5	0	970	425	15	14	2.28	1.5	0.39	7.49	22.5	47	1
				5.5	14.5	9	0	970	425	18.4	17.4	1.25	0.83	0.20	1.87	22.5	47	1
	Mid	26.7	19.4	7	12	5	0	900	380	14.2	13.2	1.71	1.21	0.29	4.69	22.5	45	1
				5.5	14.5	9	0	900	380	17	16.2	0.94	0.67	0.15	1.17	22.5	45	1
		27	19	7	12	5	0	900	380	14	13.1	1.63	1.25	0.28	4.35	22.5	45	1
				5.5	14.5	9	0	900	380	16.9	16	0.90	0.69	0.14	1.09	22.5	45	1
		29	21	7	12	5	0	900	380	14.2	13.3	2.09	1.37	0.36	6.54	22.5	45	1
				5.5	14.5	9	0	900	380	18	17.1	1.15	0.75	0.18	1.64	22.5	45	1

	Low	26.7	19.4	7	12	5	0	825	337	13.6	12.7	1.57	1.1	0.27	4.06	22.5	42	1
				5.5	14.5	9	0	825	337	17	16	0.86	0.61	0.14	1.02	22.5	42	1
		27	19	7	12	5	0	825	337	13.8	12.9	1.5	1.13	0.26	3.76	22.5	42	1
				5.5	14.5	9	0	825	337	16.7	15.7	0.83	0.62	0.13	0.94	22.5	42	1
		29	21	7	12	5	0	825	337	13.5	12.6	1.91	1.25	0.33	5.64	22.5	42	1
				5.5	14.5	9	0	825	337	17.6	16.7	1.05	0.69	0.17	1.41	22.5	42	1
MKH1-300 MKH2-300 MKH3-300	High	26.7	19.4	7	12	5	0	760	510	14.6	13.9	2.49	1.85	0.43	4.19	26	38	1
				5.5	14.5	9	0	760	510	17.6	16.6	1.37	1.02	0.22	1.05	26	38	1
		27	19	7	12	5	0	760	510	14.6	13.6	2.37	1.91	0.41	3.84	26	38	1
				5.5	14.5	9	0	760	510	17.1	16.2	1.30	1.05	0.21	0.96	26	38	1
		29	21	7	12	5	0	760	510	15	14	3.1	2.11	0.53	6.14	26	38	1
				5.5	14.5	9	0	760	510	18.4	17.4	1.71	1.16	0.27	1.54	26	38	1
	Mid	26.7	19.4	7	12	5	0	680	436	14.2	13.2	2.21	1.63	0.38	3.41	26	34	1
				5.5	14.5	9	0	680	436	17	16.2	1.22	0.90	0.19	0.85	26	34	1
		27	19	7	12	5	0	680	436	14	13.1	2.1	1.68	0.36	3.12	26	34	1
				5.5	14.5	9	0	680	436	16.9	16	1.16	0.92	0.18	0.78	26	34	1
		29	21	7	12	5	0	680	436	14.2	13.3	2.74	1.85	0.47	4.97	26	34	1
				5.5	14.5	9	0	680	436	18	17.1	1.51	1.02	0.24	1.24	26	34	1
	Low	26.7	19.4	7	12	5	0	585	356	13.6	12.7	2.01	1.42	0.34	2.78	26	31	1
				5.5	14.5	9	0	585	356	17	16	1.11	0.78	0.17	0.70	26	31	1
		27	19	7	12	5	0	585	356	13.8	12.9	1.88	1.47	0.32	2.55	26	31	1
				5.5	14.5	9	0	585	356	16.7	15.7	1.03	0.81	0.16	0.64	26	31	1
		29	21	7	12	5	0	585	356	13.5	12.6	2.34	1.57	0.4	3.76	26	31	1
				5.5	14.5	9	0	585	356	17.6	16.7	1.29	0.86	0.20	0.94	26	31	1
MKH1-400 MKH2-400 MKH3-400	High	26.7	19.4	7	12	5	0	890	680	14.6	13.9	3.21	2.43	0.55	6.12	26	48	1
				5.5	14.5	9	0	890	680	17.6	16.6	1.77	1.34	0.28	1.53	26	48	1
		27	19	7	12	5	0	890	680	14.6	13.6	3.05	2.51	0.52	5.59	26	48	1
				5.5	14.5	9	0	890	680	17.1	16.2	1.68	1.38	0.26	1.40	26	48	1
		29	21	7	12	5	0	890	680	15	14	4.01	2.77	0.69	9.03	26	48	1
				5.5	14.5	9	0	890	680	18.4	17.4	2.21	1.52	0.35	2.26	26	48	1
	Mid	26.7	19.4	7	12	5	0	800	565	14.2	13.2	2.79	2.09	0.48	4.8	26	41	1
				5.5	14.5	9	0	800	565	17	16.2	1.53	1.15	0.24	1.20	26	41	1
		27	19	7	12	5	0	800	565	14	13.1	2.65	2.16	0.46	4.39	26	41	1
				5.5	14.5	9	0	800	565	16.9	16	1.46	1.19	0.23	1.10	26	41	1
		29	21	7	12	5	0	800	565	14.2	13.3	3.48	2.38	0.6	7.05	26	41	1
				5.5	14.5	9	0	800	565	18	17.1	1.91	1.31	0.30	1.76	26	41	1
	Low	26.7	19.4	7	12	5	0	700	488	13.6	12.7	2.5	1.85	0.43	3.96	26	35	1

				5.5	14.5	9	0	700	488	17	16	1.38	1.02	0.22	0.99	26	35	1
		27	19	7	12	5	0	700	488	13.8	12.9	2.38	1.91	0.41	3.62	26	35	1
				5.5	14.5	9	0	700	488	16.7	15.7	1.31	1.05	0.21	0.91	26	35	1
		29	21	7	12	5	0	700	488	13.5	12.6	3.11	2.11	0.53	5.79	26	35	1
				5.5	14.5	9	0	700	488	17.6	16.7	1.71	1.16	0.27	1.45	26	35	1
MKH1-450 MKH2-450 MKH3-450	High	26.7	19.4	7	12	5	0	750	765	14.6	13.9	3.94	2.71	0.68	8.49	32.5	41	1
				5.5	14.5	9	0	750	765	17.6	16.6	2.17	1.49	0.34	2.12	32.5	41	1
		27	19	7	12	5	0	750	765	14.6	13.6	3.77	2.79	0.65	7.89	32.5	41	1
				5.5	14.5	9	0	750	765	17.1	16.2	2.07	1.53	0.33	1.97	32.5	41	1
		29	21	7	12	5	0	750	765	15	14	4.78	3.06	0.82	11.64	32.5	41	1
				5.5	14.5	9	0	750	765	18.4	17.4	2.63	1.68	0.41	2.91	32.5	41	1
	Mid	26.7	19.4	7	12	5	0	610	660	14.2	13.2	3.53	2.4	0.61	7.07	32.5	34	1
				5.5	14.5	9	0	610	660	17	16.2	1.94	1.32	0.31	1.77	32.5	34	1
		27	19	7	12	5	0	610	660	14	13.1	3.37	2.47	0.58	6.57	32.5	34	1
				5.5	14.5	9	0	610	660	16.9	16	1.85	1.36	0.29	1.64	32.5	34	1
		29	21	7	12	5	0	610	660	14.2	13.3	4.26	2.71	0.73	9.65	32.5	34	1
				5.5	14.5	9	0	610	660	18	17.1	2.34	1.49	0.37	2.41	32.5	34	1
	Low	26.7	19.4	7	12	5	0	500	561	13.6	12.7	3.11	2.1	0.53	5.75	32.5	31	1
				5.5	14.5	9	0	500	561	17	16	1.71	1.16	0.27	1.44	32.5	31	1
		27	19	7	12	5	0	500	561	13.8	12.9	2.98	2.16	0.51	5.35	32.5	31	1
				5.5	14.5	9	0	500	561	16.7	15.7	1.64	1.19	0.26	1.34	32.5	31	1
		29	21	7	12	5	0	500	561	13.5	12.6	3.75	2.37	0.65	7.83	32.5	31	1
				5.5	14.5	9	0	500	561	17.6	16.7	2.06	1.30	0.33	1.96	32.5	31	1
MKH1-500 MKH2-500 MKH3-500	High	26.7	19.4	7	12	5	0	830	850	14.6	13.9	4.77	3.3	0.82	9.66	32.5	56	1
				5.5	14.5	9	0	830	850	17.6	16.6	2.62	1.82	0.41	2.42	32.5	56	1
		27	19	7	12	5	0	830	850	14.6	13.6	4.56	3.4	0.78	8.97	32.5	56	1
				5.5	14.5	9	0	830	850	17.1	16.2	2.51	1.87	0.39	2.24	32.5	56	1
		29	21	7	12	5	0	830	850	15	14	5.79	3.73	1	13.28	32.5	56	1
				5.5	14.5	9	0	830	850	18.4	17.4	3.18	2.05	0.50	3.32	32.5	56	1
	Mid	26.7	19.4	7	12	5	0	670	777	14.2	13.2	4.46	3.07	0.77	8.66	32.5	37	1
				5.5	14.5	9	0	670	777	17	16.2	2.45	1.69	0.39	2.17	32.5	37	1
		27	19	7	12	5	0	670	777	14	13.1	4.27	3.16	0.73	8.04	32.5	37	1
				5.5	14.5	9	0	670	777	16.9	16	2.35	1.74	0.37	2.01	32.5	37	1
		29	21	7	12	5	0	670	777	14.2	13.3	5.41	3.47	0.93	11.88	32.5	37	1
				5.5	14.5	9	0	670	777	18	17.1	2.98	1.91	0.47	2.97	32.5	37	1
	Low	26.7	19.4	7	12	5	0	550	600	13.6	12.7	3.67	2.48	0.63	6.27	32.5	26	1
				5.5	14.5	9	0	550	600	17	16	2.02	1.36	0.32	1.57	32.5	26	1

		27	19	7	12	5	0	550	600	13.8	12.9	3.51	2.55	0.6	5.83	32.5	26	1
				5.5	14.5	9	0	550	600	16.7	15.7	1.93	1.40	0.30	1.46	32.5	26	1
		29	21	7	12	5	0	550	600	13.5	12.6	4.43	2.8	0.76	8.54	32.5	26	1
				5.5	14.5	9	0	550	600	17.6	16.7	2.44	1.54	0.38	2.14	32.5	26	1
MKH1-600 MKH2-600 MKH3-600	High	26.7	19.4	7	12	5	0	750	1020	14.6	13.9	5.16	3.74	0.89	7.49	39	79	1
				5.5	14.5	9	0	750	1020	17.6	16.6	2.84	2.06	0.45	1.87	39	79	1
		27	19	7	12	5	0	750	1020	14.6	13.6	4.91	3.86	0.84	6.86	39	79	1
				5.5	14.5	9	0	750	1020	17.1	16.2	2.70	2.12	0.42	1.72	39	79	1
		29	21	7	12	5	0	750	1020	15	14	6.36	4.25	1.09	10.8	39	79	1
				5.5	14.5	9	0	750	1020	18.4	17.4	3.50	2.34	0.55	2.70	39	79	1
	Mid	26.7	19.4	7	12	5	0	640	839	14.2	13.2	4.44	3.18	0.76	5.75	39	69	1
				5.5	14.5	9	0	640	839	17	16.2	2.44	1.75	0.38	1.44	39	69	1
		27	19	7	12	5	0	640	839	14	13.1	4.23	3.28	0.73	5.27	39	69	1
				5.5	14.5	9	0	640	839	16.9	16	2.33	1.80	0.37	1.32	39	69	1
		29	21	7	12	5	0	640	839	14.2	13.3	5.46	3.62	0.94	8.25	39	69	1
				5.5	14.5	9	0	640	839	18	17.1	3.00	1.99	0.47	2.06	39	69	1
	Low	26.7	19.4	7	12	5	0	540	697	13.6	12.7	3.84	2.73	0.66	4.46	39	60	1
				5.5	14.5	9	0	540	697	17	16	2.11	1.50	0.33	1.12	39	60	1
		27	19	7	12	5	0	540	697	13.8	12.9	3.66	2.81	0.63	4.09	39	60	1
				5.5	14.5	9	0	540	697	16.7	15.7	2.01	1.55	0.32	1.02	39	60	1
		29	21	7	12	5	0	540	697	13.5	12.6	4.71	3.1	0.81	6.37	39	60	1
				5.5	14.5	9	0	540	697	17.6	16.7	2.59	1.71	0.41	1.59	39	60	1
MKH1-800 MKH2-800 MKH3-800	High	26.7	19.4	7	12	5	0	1000	1360	14.6	13.9	6.41	4.72	1.1	11	39	117	1
				5.5	14.5	9	0	1000	1360	17.6	16.6	3.53	2.60	0.55	2.75	39	117	1
		27	19	7	12	5	0	1000	1360	14.6	13.6	6.09	4.87	1.05	10.06	39	117	1
				5.5	14.5	9	0	1000	1360	17.1	16.2	3.35	2.68	0.53	2.52	39	117	1
		29	21	7	12	5	0	1000	1360	15	14	7.93	5.37	1.36	15.98	39	117	1
				5.5	14.5	9	0	1000	1360	18.4	17.4	4.36	2.95	0.68	4.00	39	117	1
	Mid	26.7	19.4	7	12	5	0	950	1155	14.2	13.2	5.66	4.13	0.97	8.85	39	109	1
				5.5	14.5	9	0	950	1155	17	16.2	3.11	2.27	0.49	2.21	39	109	1
		27	19	7	12	5	0	950	1155	14	13.1	5.39	4.26	0.93	8.11	39	109	1
				5.5	14.5	9	0	950	1155	16.9	16	2.96	2.34	0.47	2.03	39	109	1
		29	21	7	12	5	0	950	1155	14.2	13.3	6.99	4.7	1.2	12.8	39	109	1
				5.5	14.5	9	0	950	1155	18	17.1	3.84	2.59	0.60	3.20	39	109	1
	Low	26.7	19.4	7	12	5	0	860	808	13.6	12.7	4.3	3.08	0.74	5.46	39	95	1
				5.5	14.5	9	0	860	808	17	16	2.37	1.69	0.37	1.37	39	95	1
		27	19	7	12	5	0	860	808	13.8	12.9	4.09	3.17	0.7	5	39	95	1

				5.5	14.5	9	0	860	808	16.7	15.7	2.25	1.74	0.35	1.25	39	95	1
		29	21	7	12	5	0	860	808	13.5	12.6	5.28	3.5	0.91	7.83	39	95	1
				5.5	14.5	9	0	860	808	17.6	16.7	2.90	1.93	0.46	1.96	39	95	1
MKH1-900 MKH2-900 MKH3-900	High	26.7	19.4	7	12	5	0	1140	1530	14.6	13.9	7.59	5.65	1.3	14.4	39	138	1
				5.5	14.5	9	0	1140	1530	17.6	16.6	4.17	3.11	0.65	3.60	39	138	1
		27	19	7	12	5	0	1140	1530	14.6	13.6	7.25	5.86	1.25	13.37	39	138	1
				5.5	14.5	9	0	1140	1530	17.1	16.2	3.99	3.22	0.63	3.34	39	138	1
		29	21	7	12	5	0	1140	1530	15	14	9.35	6.41	1.61	20.29	39	138	1
				5.5	14.5	9	0	1140	1530	18.4	17.4	5.14	3.53	0.81	5.07	39	138	1
	Mid	26.7	19.4	7	12	5	0	1040	1377	14.2	13.2	7.07	5.23	0.40	12.83	39	117	1
				5.5	14.5	9	0	1040	1377	17	16.2	3.89	2.88	0.20	3.21	39	117	1
		27	19	7	12	5	0	1040	1377	14	13.1	6.76	5.42	1.16	11.91	39	117	1
				5.5	14.5	9	0	1040	1377	16.9	16	3.72	2.98	0.58	2.98	39	117	1
		29	21	7	12	5	0	1040	1377	14.2	13.3	8.7	5.93	1.5	18.04	39	117	1
				5.5	14.5	9	0	1040	1377	18	17.1	4.79	3.26	0.75	4.51	39	117	1
	Low	26.7	19.4	7	12	5	0	930	1200	13.6	12.7	6.44	4.73	1.11	11.01	39	105	1
				5.5	14.5	9	0	930	1200	17	16	3.54	2.60	0.56	2.75	39	105	1
		27	19	7	12	5	0	930	1200	13.8	12.9	6.16	4.89	1.06	10.22	39	105	1
				5.5	14.5	9	0	930	1200	16.7	15.7	3.39	2.69	0.53	2.56	39	105	1
		29	21	7	12	5	0	930	1200	13.5	12.6	7.92	5.36	1.36	15.44	39	105	1
				5.5	14.5	9	0	930	1200	17.6	16.7	4.36	2.95	0.68	3.86	39	105	1

Remark:
ESP: external static pressure; **DB:** dry bulb temp.; **WB:** wet bulb temp.; **EWT:** enter water temp.;
LWT: leaving water temp.; **PWR:** power; **nos:** numbers.

Heating Capacity:

Model	Air flow volume (Hi)	Water temp. change	Air inlet temp. (21℃ DB)																							
			Water inlet temp. (℃)																							
			35			40			45			50			55			60			65			70		
			Capacity	Water flow volume	Water pressure drop	Capacity	Water flow volume	Water pressure drop	Capacity	Water flow volume	Water pressure drop	Capacity	Water flow volume	Water pressure drop	Capacity	Water flow volume	Water pressure drop	Capacity	Water flow volume	Water pressure drop	Capacity	Water flow volume	Water pressure drop	Capacity	Water flow volume	Water pressure drop
	m^3/h	℃	kW	m^3/h	kPa	kW	m^3/h	kPa	kW	m^3/h	kPa	kW	m^3/h	kPa	kW	m^3/h	kPa	kW	m^3/h	kPa	kW	m^3/h	kPa	kW	m^3/h	kPa
MKH1-150 MKH2-150 MKH3-150	255	10	0.57	0.05	0.12	1.05	0.09	0.12	1.49	0.13	0.61	1.92	0.16	0.94	2.34	0.20	1.32	2.76	0.24	1.74	3.17	0.27	18.00	3.58	0.31	2.72
		8	0.73	0.08	0.27	1.18	0.13	0.27	1.60	0.17	1.02	2.02	0.22	1.51	2.44	0.26	2.07	2.85	0.31	2.70	3.26	0.35	23.33	3.67	0.39	4.15
		7	0.80	0.10	0.39	1.23	0.15	0.39	1.66	0.20	1.34	2.07	0.25	1.97	2.48	0.30	2.68	2.90	0.36	3.47	3.31	0.41	27.33	3.71	0.46	5.30
		6	0.86	0.12	0.57	1.29	0.18	0.57	1.70	0.24	1.84	2.12	0.30	2.65	2.53	0.36	3.59	2.94	0.42	4.63	3.35	0.48	32.00	3.76	0.54	7.02
		5	0.92	0.16	0.87	1.34	0.23	0.87	1.75	0.30	2.62	2.16	0.37	3.75	2.57	0.44	5.03	2.98	0.51	6.46	3.39	0.58	38.66	3.80	0.65	9.74
MKH1-250 MKH2-250 MKH3-250	425	10	0.80	0.07	0.22	1.53	0.13	0.64	2.21	0.19	1.20	2.88	0.25	1.87	3.53	0.30	2.66	4.18	0.36	3.54	4.83	0.42	4.52	5.48	0.47	5.60
		8	1.06	0.11	0.50	1.74	0.19	1.17	2.41	0.26	2.02	3.06	0.33	3.04	3.71	0.40	4.22	4.36	0.47	5.54	5.00	0.54	7.01	5.68	0.61	8.60
		7	1.17	0.14	0.74	1.84	0.23	1.61	2.50	0.31	2.71	3.15	0.39	4.01	3.8	0.47	5.50	4.44	0.55	7.18	5.08	0.62	9.04	5.73	0.7	11.06
		6	1.27	0.18	1.12	1.94	0.28	2.28	2.59	0.37	3.73	3.24	0.46	5.45	3.88	0.56	7.42	4.52	0.65	9.63	5.17	0.74	12.06	5.81	0.83	14.72
		5	1.37	0.24	1.73	2.03	0.35	3.36	2.67	0.46	5.38	3.32	0.57	7.76	3.96	0.68	10.48	4.61	0.79	13.52	5.25	0.90	16.87	5.89	1.01	20.54
MKH1-300 MKH2-300 MKH3-300	510	10	0.80	0.07	0.19	1.57	0.13	0.59	2.30	0.20	1.14	3.02	0.26	1.82	3.73	0.32	2.62	4.43	0.38	3.54	5.14	0.44	4.56	5.84	0.50	5.69
		8	1.08	0.12	0.45	1.81	0.19	1.11	2.53	0.27	1.97	3.24	0.35	3.02	3.94	0.42	4.24	4.65	0.50	5.63	5.35	0.57	7.18	6.05	0.65	8.88
		7	1.20	0.15	0.69	1.93	0.24	1.55	2.64	0.32	2.67	3.34	0.41	4.02	4.05	0.5	5.59	4.75	0.58	7.37	5.45	0.67	9.34	6.16	0.76	11.51
		6	1.32	0.19	1.06	2.04	0.29	2.23	2.75	0.39	3.73	3.45	0.49	5.53	4.15	0.59	7.62	4.86	0.70	9.97	5.56	0.80	12.58	6.26	0.90	15.45
		5	1.44	0.25	1.68	2.15	0.37	3.35	2.85	0.49	5.46	3.55	0.61	7.98	4.26	0.73	10.89	4.96	0.85	14.16	5.66	0.97	17.79	6.36	1.09	21.76
MKH1-400 MKH2-400 MKH3-400	680	10	0.96	0.08	0.25	1.91	0.16	0.83	2.82	0.24	1.62	3.71	0.32	2.61	4.61	0.4	3.78	5.49	0.47	5.12	6.38	0.55	6.62	7.27	0.62	8.28
		8	1.30	0.14	0.63	2.22	0.24	1.57	3.11	0.33	2.83	4.00	0.43	4.36	4.89	0.53	6.15	5.78	0.62	8.19	6.66	0.72	10.48	7.55	0.81	12.99
		7	1.46	0.18	0.97	2.73	0.29	2.22	3.26	0.40	3.85	4.15	0.51	5.83	5.03	0.62	8.14	5.92	0.73	10.75	6.80	0.83	13.67	7.69	0.94	16.87
		6	1.62	0.23	1.50	2.51	0.36	3.21	3.40	0.49	5.40	4.29	0.61	8.05	5.17	0.74	11.13	6.06	6.87	14.60	6.94	0.99	18.46	7.83	1.12	22.70
		5	1.77	0.30	2.40	2.66	0.46	4.84	3.54	0.61	7.94	4.43	0.76	11.65	5.31	0.91	15.95	6.20	1.06	20.79	7.08	1.22	26.16	7.97	1.37	32.04
MKH1-450 MKH2-450 MKH3-450	765	10	1.69	0.15	0.38	3.03	0.26	1.03	4.28	0.37	1.85	5.49	0.47	2.83	6.69	0.57	3.95	7.88	0.68	5.21	9.06	0.78	6.61	10.24	0.88	8.14
		8	2.11	0.23	0.82	3.37	0.36	1.80	4.59	0.49	3.04	5.78	0.62	4.50	6.97	0.75	6.18	8.15	0.88	8.06	9.31	1.00	10.14	10.50	1.13	12.39
		7	2.30	0.28	1.18	3.53	0.43	2.44	4.73	0.58	4.02	5.92	0.73	5.88	7.10	0.87	8.00	8.28	1.02	10.38	9.45	1.16	13.01	10.62	1.3	15.86
		6	2.47	0.35	1.73	3.68	0.53	3.41	4.87	0.70	5.48	6.05	0.87	7.93	7.23	1.04	10.72	8.40	1.20	13.84	9.57	1.37	17.28	10.75	1.54	21.01
		5	2.63	0.45	2.62	3.82	0.66	4.95	5.00	0.86	7.82	6.18	1.06	11.2	7.35	1.26	15.04	8.83	1.47	19.34	9.70	1.67	24.06	10.87	1.87	29.19
MKH1-500 MKH2-500 MKH3-500	850	10	1.82	0.16	0.43	3.27	0.28	1.17	4.64	0.40	2.12	5.97	0.51	3.25	7.28	0.63	4.56	8.58	0.74	6.02	9.87	0.85	7.65	11.17	0.96	9.42
		8	2.28	0.25	0.93	3.66	0.39	2.07	4.98	0.54	3.50	6.29	0.68	5.2	7.59	0.82	7.14	8.88	0.95	9.33	10.17	1.09	11.74	11.46	1.23	14.38
		7	2.49	0.31	1.35	3.83	0.47	2.81	5.15	0.63	4.63	6.45	0.79	6.79	7.74	0.95	9.27	9.03	1.11	12.03	10.31	1.27	15.09	11.60	1.42	18.41
		6	2.68	0.38	1.98	4.00	0.57	3.92	5.30	0.76	6.33	6.6	0.94	9.18	7.89	1.13	12.43	9.17	1.31	16.06	10.46	1.50	20.06	11.74	1.68	24.42
		5	2.85	0.49	3.01	4.16	0.71	5.71	5.45	0.94	9.05	6.74	1.16	12.99	8.03	1.38	17.46	9.31	1.60	22.45	10.59	1.82	27.97	11.88	2.04	33.96
MKH1-600 MKH2-600 MKH3-600	1020	10	1.71	0.15	0.34	3.23	0.28	1.02	4.67	0.4	1.92	6.08	0.52	3.03	7.48	0.64	4.33	8.87	0.76	5.81	10.26	0.88	7.46	11.64	1.00	9.28
		8	2.23	0.24	0.79	3.68	0.39	1.87	5.09	0.55	3.27	6.48	0.70	4.97	7.87	0.85	6.95	9.26	0.99	9.19	10.64	1.14	11.68	12.03	1.29	14.42
		7	2.46	0.30	1.18	3.89	0.48	2.59	5.29	0.65	4.41	6.68	0.82	6.59	8.07	0.99	9.12	9.45	1.16	11.98	10.83	1.33	15.16	12.22	1.5	18.64
		6	2.69	0.38	1.79	4.09	0.59	3.70	5.49	0.79	6.13	6.87	0.98	9.03	8.26	1.18	12.39	9.64	1.38	16.17	11.02	1.58	20.36	12.4	1.78	24.96
		5	2.90	0.50	2.79	4.30	0.74	5.50	5.69	0.98	8.9	7.07	1.21	12.96	8.45	1.45	17.64	9.83	1.69	22.89	11.21	1.93	28.71	12.59	2.16	35.08
MKH1-800 MKH2-800 MKH3-800	1360	10	2.05	0.18	0.47	3.93	0.34	1.43	5.72	0.49	2.73	7.49	0.64	4.34	9.24	0.79	6.23	10.98	0.94	8.39	12.73	1.09	10.82	14.43	1.24	13.49
		8	2.70	0.29	1.10	4.51	0.48	2.66	6.27	0.67	4.69	8.02	0.86	7.17	9.76	1.05	10.06	11.50	1.24	13.35	13.24	1.42	17.02	14.98	1.61	21.05
		7	3.00	0.37	1.66	4.78	0.59	3.71	6.54	0.80	6.35	8.28	1.02	9.54	10.02	1.23	13.26	11.76	1.44	17.46	13.5	1.66	22.14	15.23	1.87	27.27
		6	3.29	0.47	2.54	5.05	0.72	5.31	6.80	0.97	8.86	8.54	1.22	13.12	10.28	1.47	18.06	12.02	1.72	23.64	1375	1.97	29.82	15.49	2.22	36.60
		5	3.57	0.61	3.99	5.32	0.91	7.94	7.06	1.21	12.94	8.80	1.51	18.91	10.53	1.81	25.80	12.27	2.11	33.56	14.01	2.41	42.16	15.75	2.71	51.58
MKH1-900 MKH2-900 MKH3-900	1530	10	2.20	0.19	0.60	4.21	0.36	1.80	6.14	0.53	3.41	8.04	0.69	5.39	9.92	0.85	7.71	11.8	1.01	10.35	13.68	1.18	13.3	15.55	1.34	16.54
		8	2.90	0.31	1.39	4.83	0.52	3.32	6.73	0.72	5.83	8.61	0.93	8.86	10.49	1.13	12.38	12.37	1.33	16.37	14.24	1.53	20.8	16.12	1.73	25.66
		7	3.22	0.40	2.09	5.13	0.63	4.61	7.02	0.86	7.85	8.90	1.09	11.74	10.78	1.32	16.25	12.65	1.55	21.33	14.52	1.78	26.97	16.40	2.01	33.15
		6	3.53	0.51	3.17	5.43	0.78	6.58	7.31	1.05	10.91	9.18	1.31	16.09	11.06	1.58	22.06	12.93	1.85	28.76	14.8	2.12	36.21	16.68	2.39	44.32
		5	3.83	0.66	4.96	5.71	0.98	9.80	7.59	1.30	15.86	9.46	1.63	23.09	11.34	1.95	31.35	13.21	2.27	40.67	15.08	2.59	50.94	16.96	2.91	62.17

Heating capacity modification coefficient table:

Model	MKH1-150 MKH2-150 MKH3-150	MKH1-250 MKH2-250 MKH3-250	MKH1-300 MKH2-300 MKH3-300	MKH1-400 MKH2-400 MKH3-400	MKH1-450 MKH2-450 MKH3-450	MKH1-500 MKH2-500 MKH3-500	MKH1-600 MKH2-600 MKH3-600	MKH1-800 MKH2-800 MKH3-800	MKH1-900 MKH2-900 MKH3-900
Mid-speed	0.88	0.87	0.86	0.88	0.86	0.88	0.89	0.9	0.9
Low-speed	0.74	0.75	0.75	0.76	0.74	0.75	0.75	0.76	0.75

Remark:
ESP: external static pressure; **DB:** dry bulb temp.; **WB:** wet bulb temp.; **EWT:** enter water temp.;
LWT: leaving water temp.; **PWR:** power; **nos:** numbers.

Part 5 Dimension

MKH1, MKH2 Type:

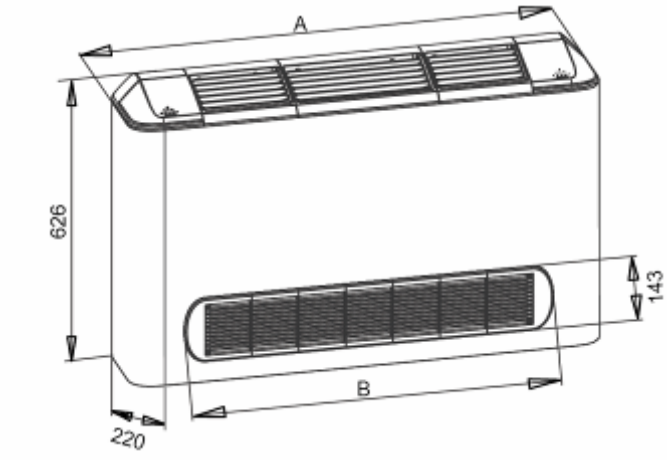

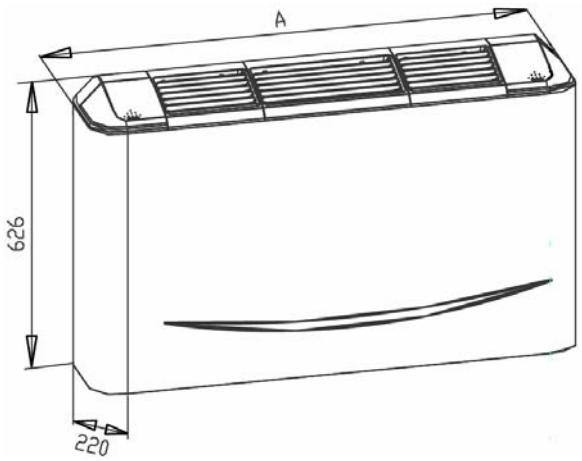

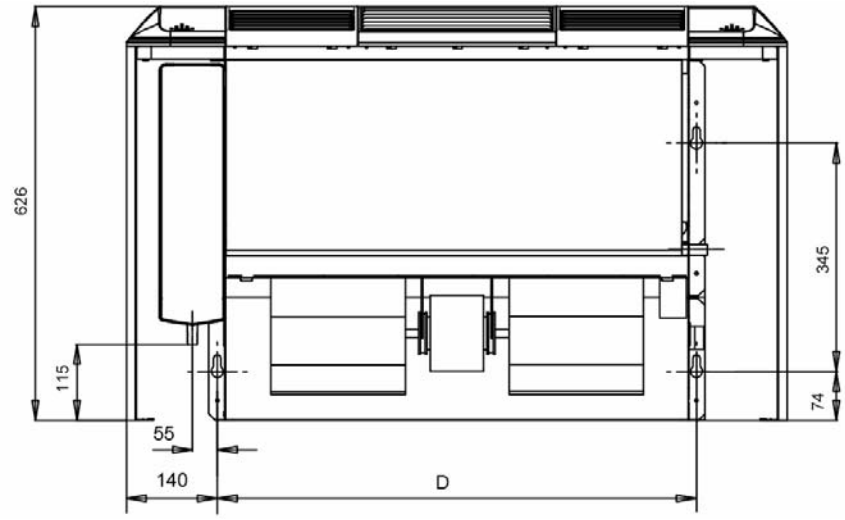

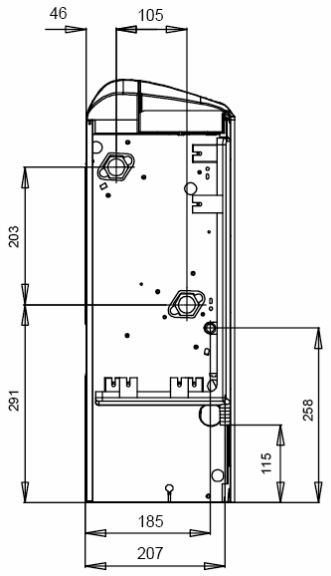

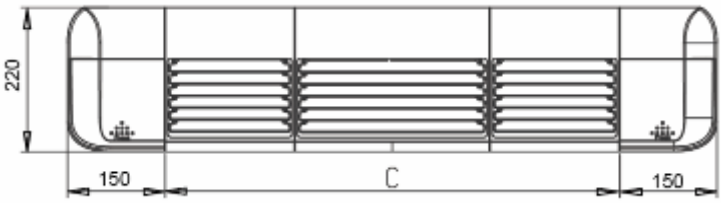

MKH1(H2)	150	250	300	400	450	500	600	800	900
A (mm)	800	800	1000	1000	1200	1200	1500	1500	1500
B (mm)	584	584	784	784	984	984	1284	1284	1284
C (mm)	500	500	700	700	900	900	1200	1200	1200
D (mm)	526	526	726	726	926	926	1226	1226	1226

MKH3 Type:

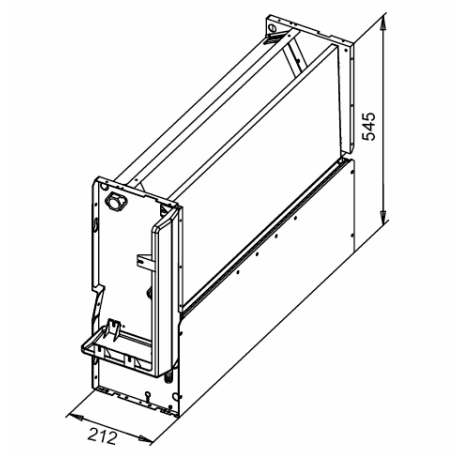

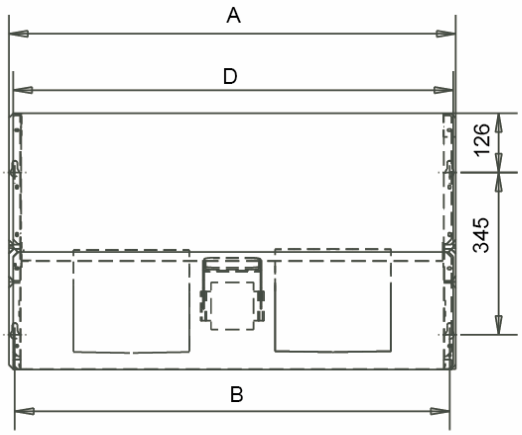

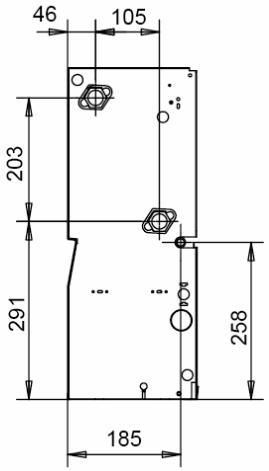

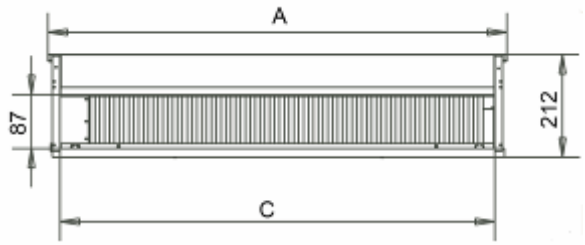

MKF3	150	250	300	400	450	500	600	800	900
A (mm)	550	550	750	750	950	950	1250	1250	1250
B (mm)	526	526	726	726	926	926	1226	1226	1226
C (mm)	500	500	700	700	900	900	1200	1200	1200
D (mm)	532	532	732	732	932	932	1232	1232	1232

Part 6 Wiring Diagram

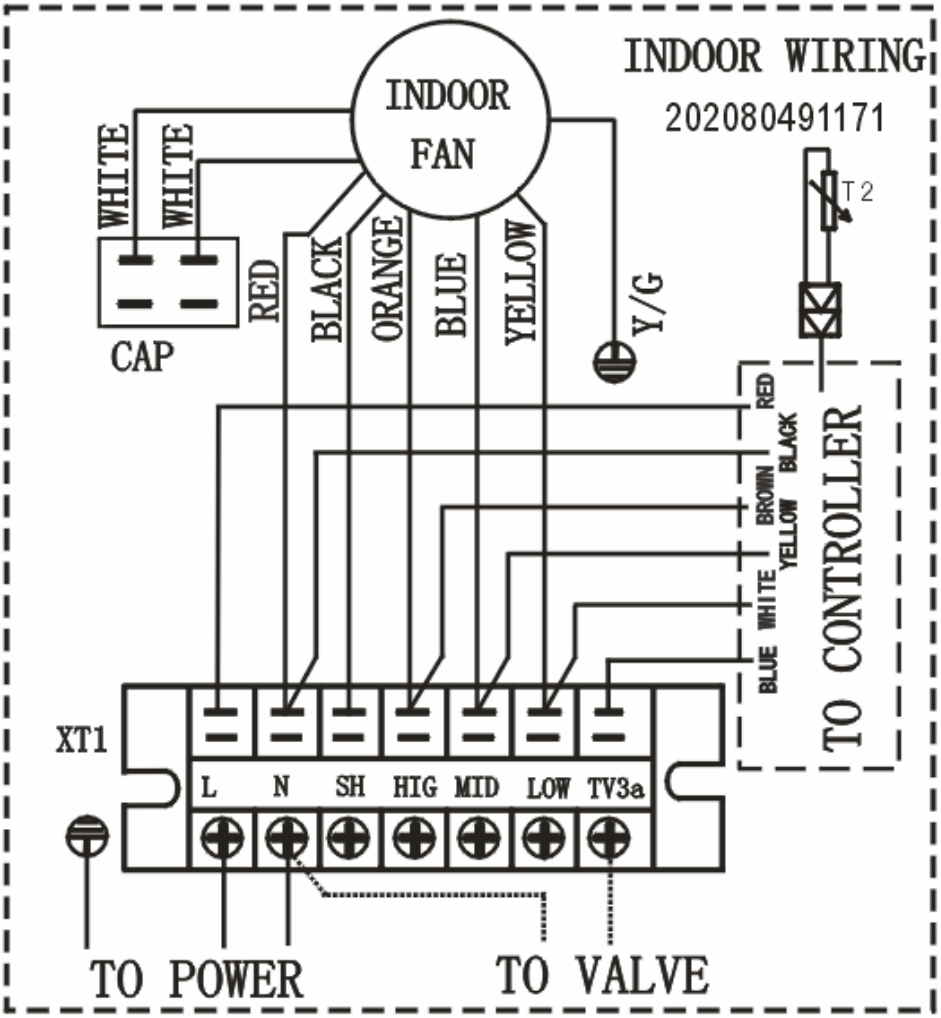

Part 7 Unit Installation, Operation and Maintenance

Installation space

The unit may be mounted vertically on the wall, provided that the correct clearances for the positioning are maintained.

Version I

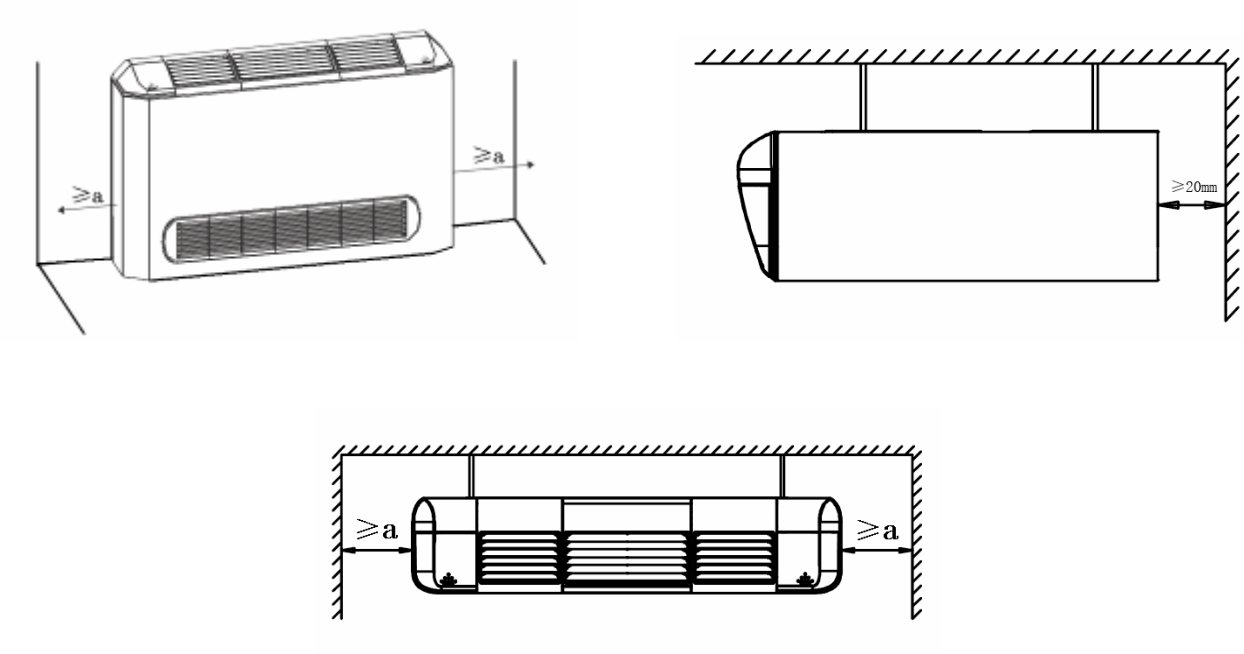

Version II

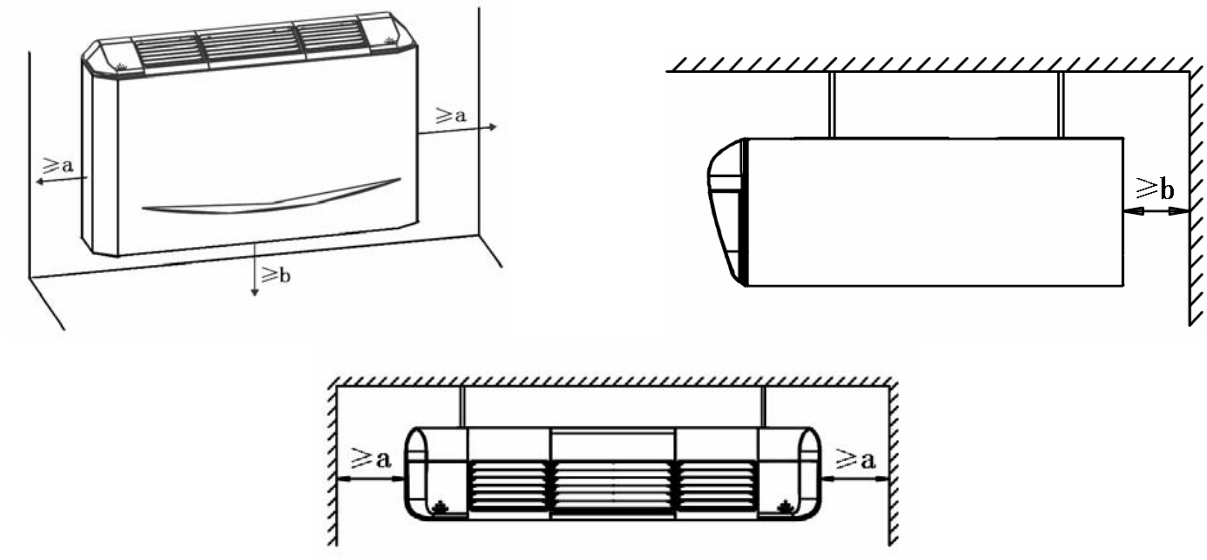

Version Ⅲ

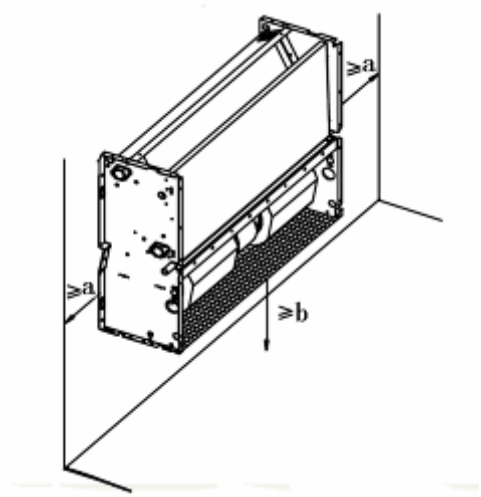

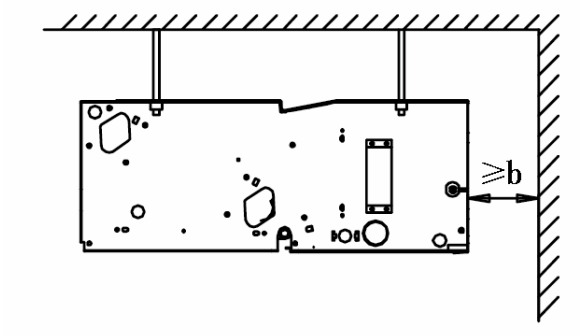

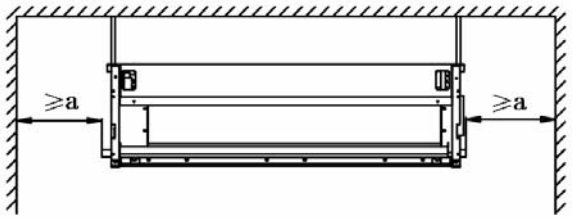

Version	I	II	Ⅲ
a mm	150	150	200
b mm	-	80	80

Condensate drainage pipe installation

The condensation drainage system must be set up with an adequate fall, to ensure that the water escapes properly. Following are directions for setting up a proper condensation drainage system.

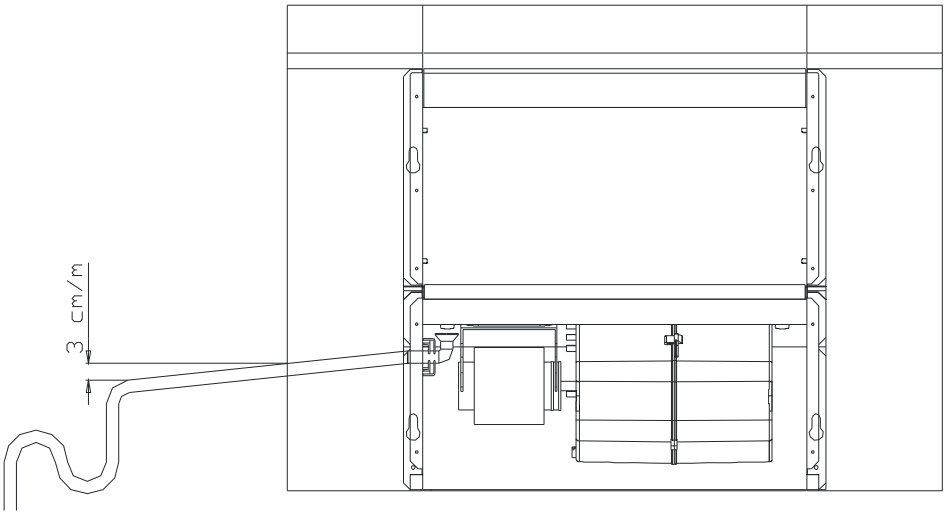

The condensation drainage system must be fitted with a suitable trap to prevent seepage of odors. Following are directions for setting up the trop.

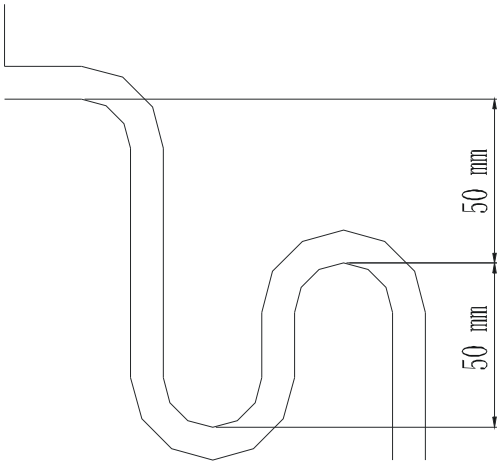

Part 8 Exploded view

MKH1-150, MKH1-250

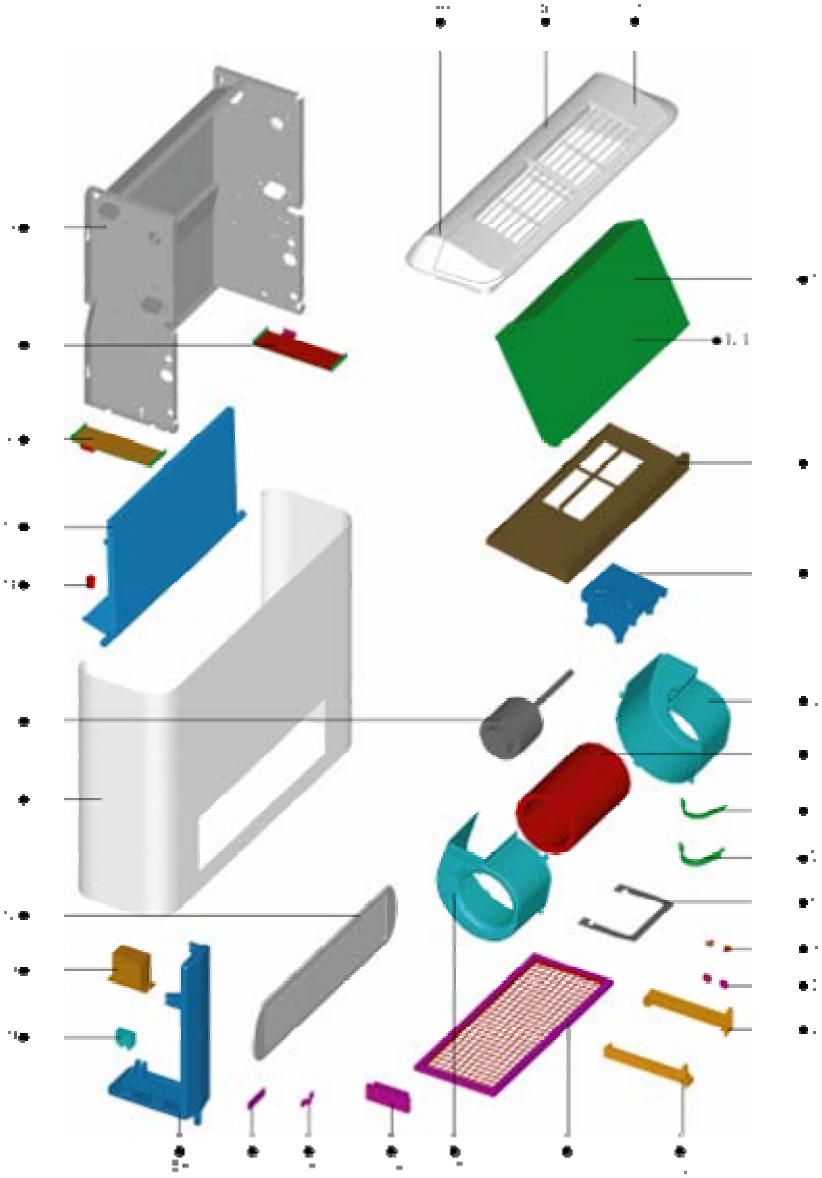

No.	Part Name	Quantity	No.	Part Name	Quantity
1	Evaporator ass'y	1	16	Wire clamp	1
1.1	Pipe temp. sensor	1	17	Wire joint	1
2	Middle beam	1	18	Drainage pan ass'y	1
3	Motor bracket	1	19	Motor capacitor	1
4	Left volute shell	1	20	Capacitor box	1
5	Fan	1	21	Louver ass'y	1
6	Motor clamp	1	22	Cabinet ass'y	1
7	Motor clamp	1	23	Motor	1
8	Board	1	24	Seal stopper	1
9	Filter bracket	2	25	Drainage pan	1
10	Filter bracket	2	26	Left sealed board ass'y	1
11	Filter bracket	1	27	Right sealed board ass'y	1
12	Filter bracket	1	28	Base	1
13	Filter	1	29	Left cover seat ass'y	1
14	Volute shell	1	30	Louver ass'y	2
15	Wire joint,7p	1	31	Right cover seat ass'y	1

MKH1-300, MKH1-400

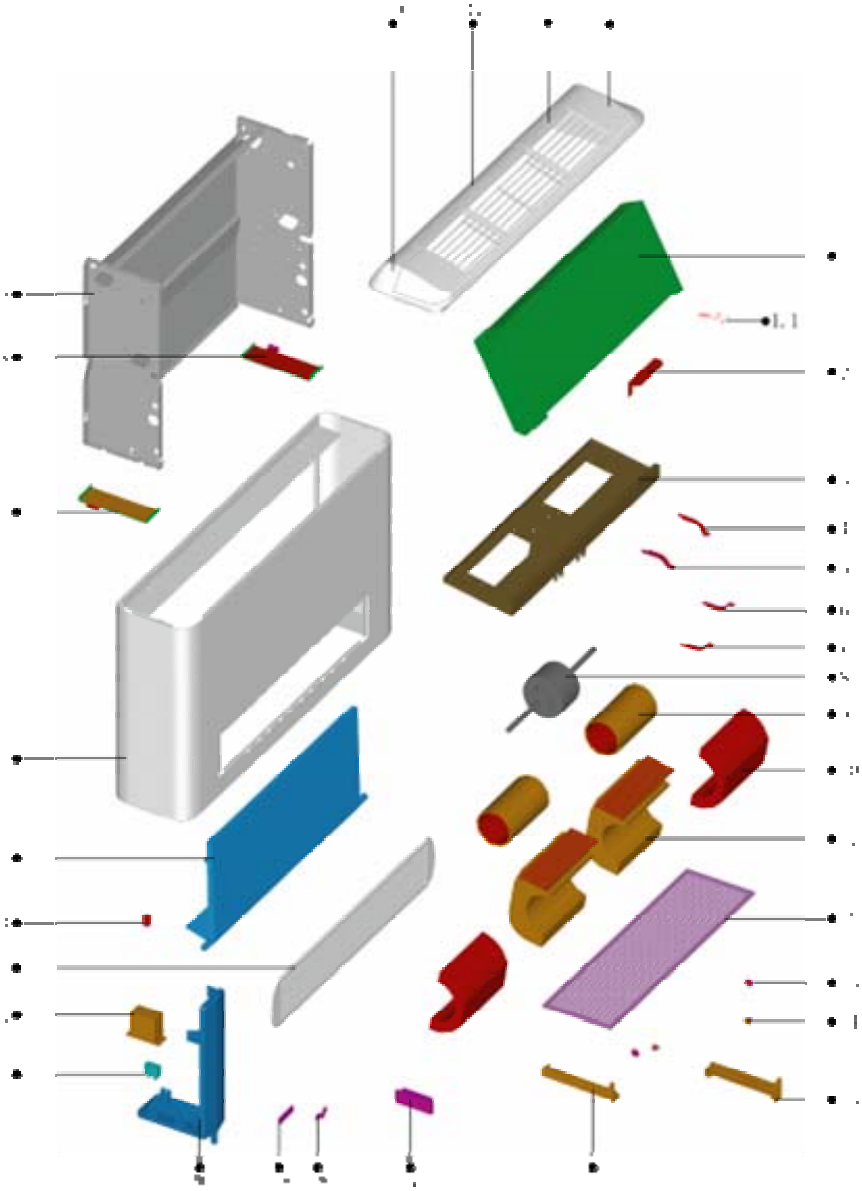

No.	Part Name	Quantity	No.	Part Name	Quantity
1	Evaporator ass'y	1	17	Wire joint,7p	1
1.1	Temp.sensor ass'y	1	18	Wire clamp	1
2	Strengthen board	1	19	Wire joint	1
3	Middle beam	1	20	Drainage pan ass'y	1
4	Fixing board	1	21	Motor capacitor	1
5	Fixing board	1	22	Capacitor box	1
6	Fixing board	1	23	Louver ass'y	1
7	Fixing board	1	24	Seal stopper	1
8	Motor	1	25	Drainage pan	1
9	Fan	2	26	Cabinet ass'y	1
10	Volute shell	2	27	Left sealed board ass'y	1
11	Volute shell	2	28	Right sealed board ass'y	1
12	Filter	1	29	Base	1
13	Filter bracket	2	30	Left cover seat ass'y	1
14	Filter bracket	2	31	Louver ass'y	1
15	Filter bracket	1	32	Louver ass'y	2
16	Filter bracket	1	33	Right cover seat ass'y	1

MKH1-450, MKH1-500

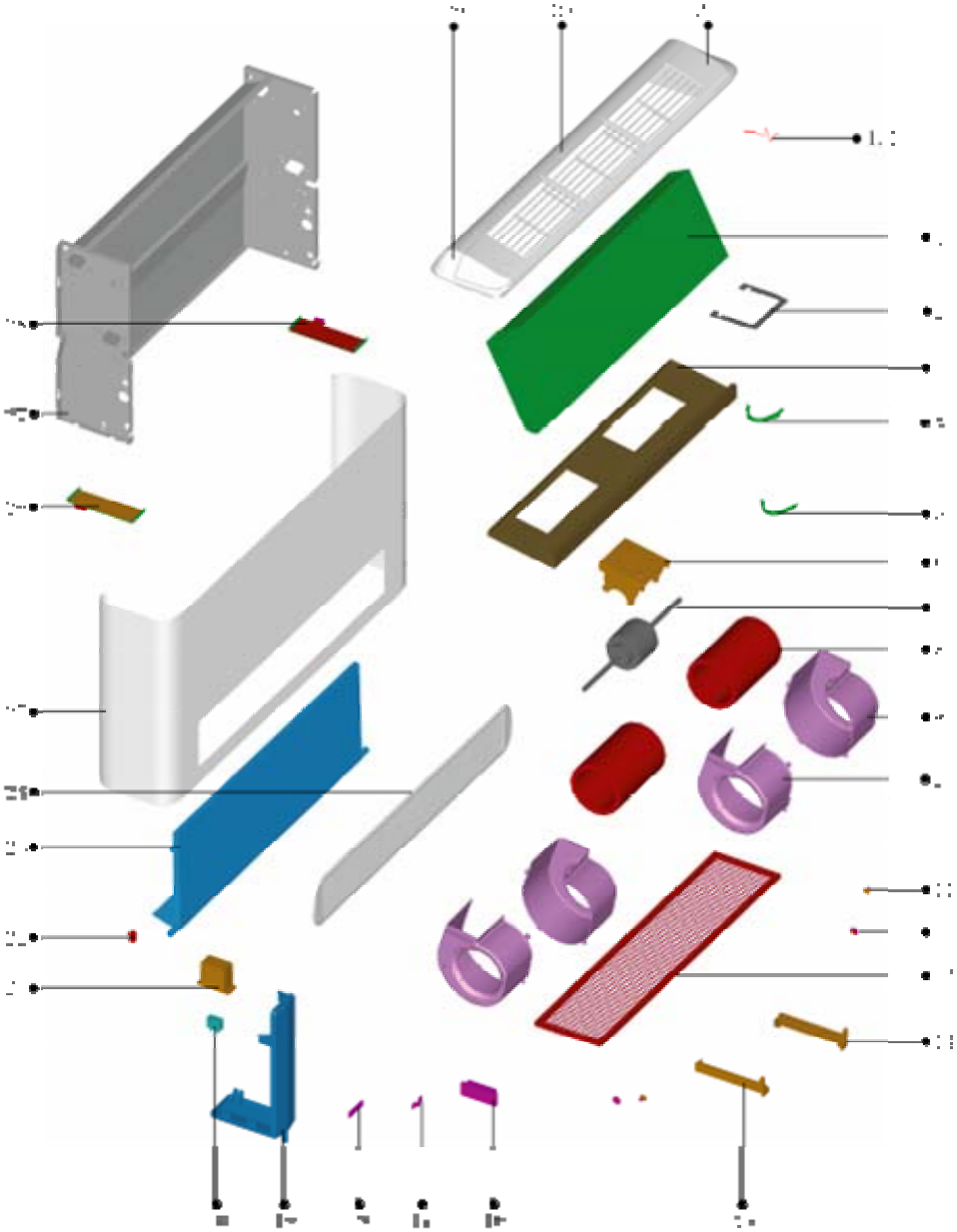

No.	Part Name	Quantity	No.	Part Name	Quantity
1	Evaporator ass'y	1	16	Wire clamp	1
1.1	Pipe temp. sensor	1	17	Wire joint	1
2	Board	1	18	Drainage pan ass'y	1
3	Middle beam	1	19	Motor capacitor	1
4	Motor clamp	1	20	Capacitor box	1
5	Motor clamp	1	21	Louver ass'y	1
6	Motor bracket	1	22	Cabinet ass'y	1
7	Motor	1	23	Motor	1
8	Fan	2	24	Seal stopper	1
9	Left volute shell	2	25	Drainage pan	1
10	Volute shell	2	26	Left sealed board ass'y	1
11	Filter bracket	2	27	Right sealed board ass'y	1
12	Filter bracket	2	28	Base	1
13	Filter	1	29	Left cover seat ass'y	1
14	Filter bracket	1	30	Louver ass'y	3
15	Filter bracket	1	31	Right cover seat ass'y	1

MKH1-600, MKH1-800, MKH1-900

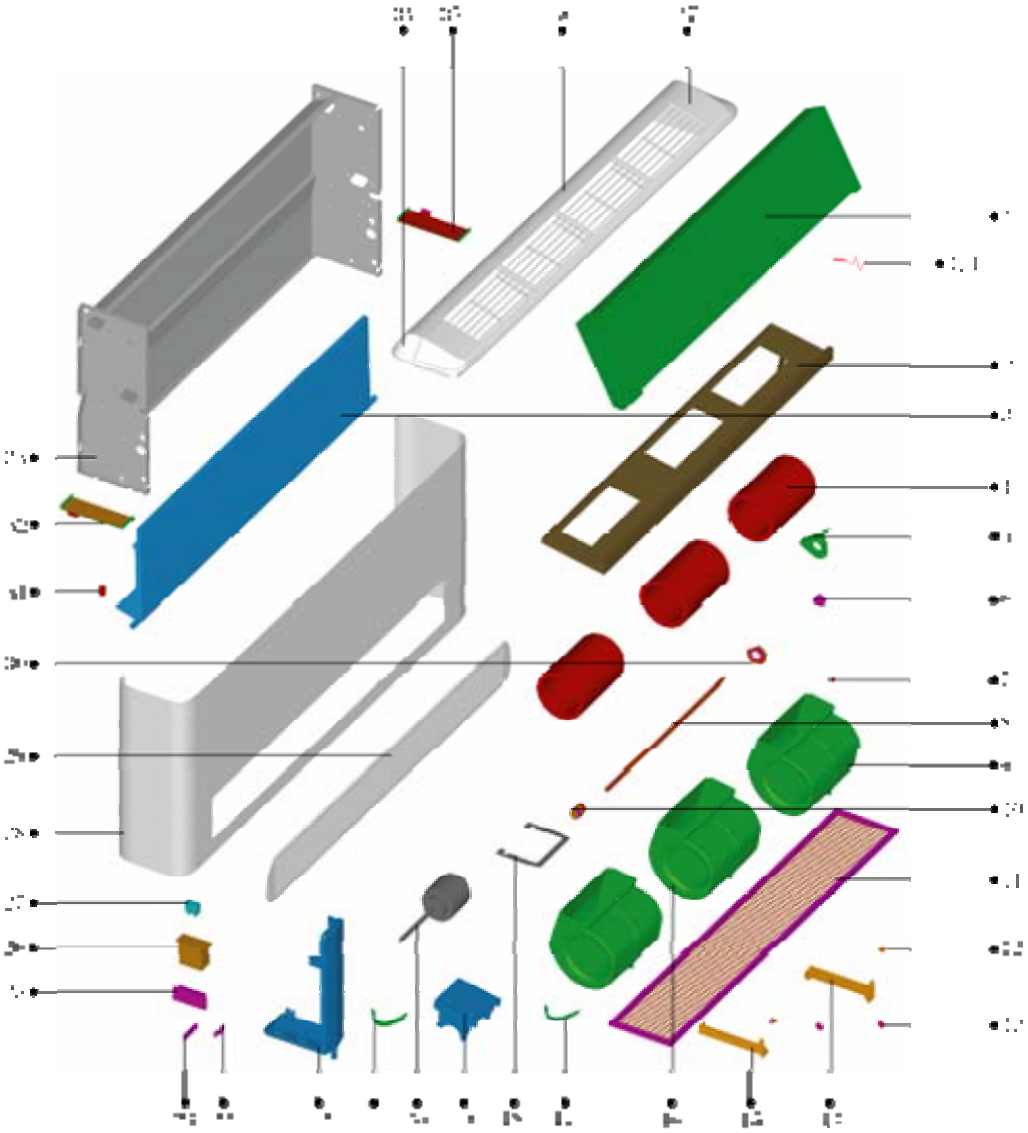

No.	Part Name	Quantity	No.	Part Name	Quantity
1	Evaporator ass'y	1	19	Motor bracket	1
1.1	Pipe temp. sensor	1	20	Motor	1
2	Middle beam	1	21	Motor clamp	1
3	Drainage pan	1	22	Drainage pan ass'y	1
4	Fan	3	23	Wire clamp	1
5	Bearing supporting board	1	24	Wire joint	1
6	Bearing base	1	25	Wire joint,7p	1
7	Bearing	1	26	Capacitor box	1
8	Connecting shaft	1	27	Motor capacitor	1
9	Left volute shell	3	28	Cabinet ass'y	1
10	Coupling	1	29	Louver ass'y	1
11	Filter	1	30	Bearing Fixing board	1
12	Filter bracket	2	31	Seal stopper	1
13	Filter bracket	2	32	Left sealed board ass'y	1
14	Filter bracket	1	33	Base	1
15	Filter bracket	1	34	Left cover seat ass'y	1
16	Volute shell	3	35	Right sealed board ass'y	1
17	Motor clamp	1	36	Louver ass'y	4
18	Board	1	37	Right cover seat ass'y	1

MKH2-150, MKH2-250

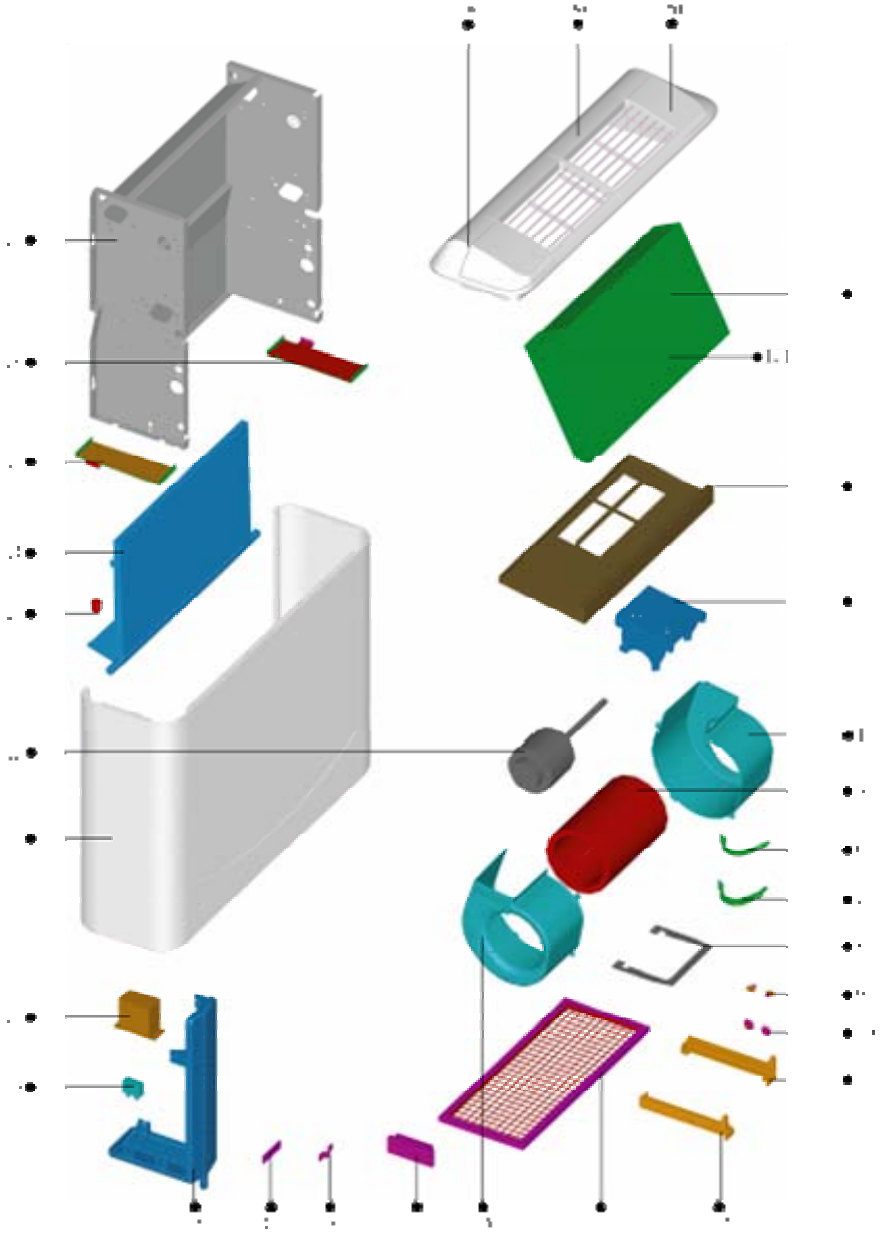

No.	Part Name	Quantity		No.	Part Name	Quantity
1	Evaporator ass'y	1		16	Wire clamp	1
1.1	Pipe temp. sensor	1		17	Wire joint	1
2	Middle beam	1		18	Drainage pan ass'y	1
3	Motor bracket	1		19	Motor capacitor	1
4	Left volute shell	1		20	Capacitor box	1
5	Fan	1		21	Cabinet ass'y	1
6	Motor clamp	1		22	Motor	1
7	Motor clamp	1		23	Seal stopper	1
8	Board	1		24	Drainage pan	1
9	Filter bracket	2		25	Left sealed board ass'y	1
10	Filter bracket	2		26	Right sealed board ass'y	1
11	Filter bracket	1		27	Base	1
12	Filter bracket	1		28	Left cover seat ass'y	1
13	Filter	1		29	Louver ass'y	2
14	Volute shell	1		30	Right cover seat ass'y	1
15	Wire joint,7p	1				

MKH2-300, MKH2-400

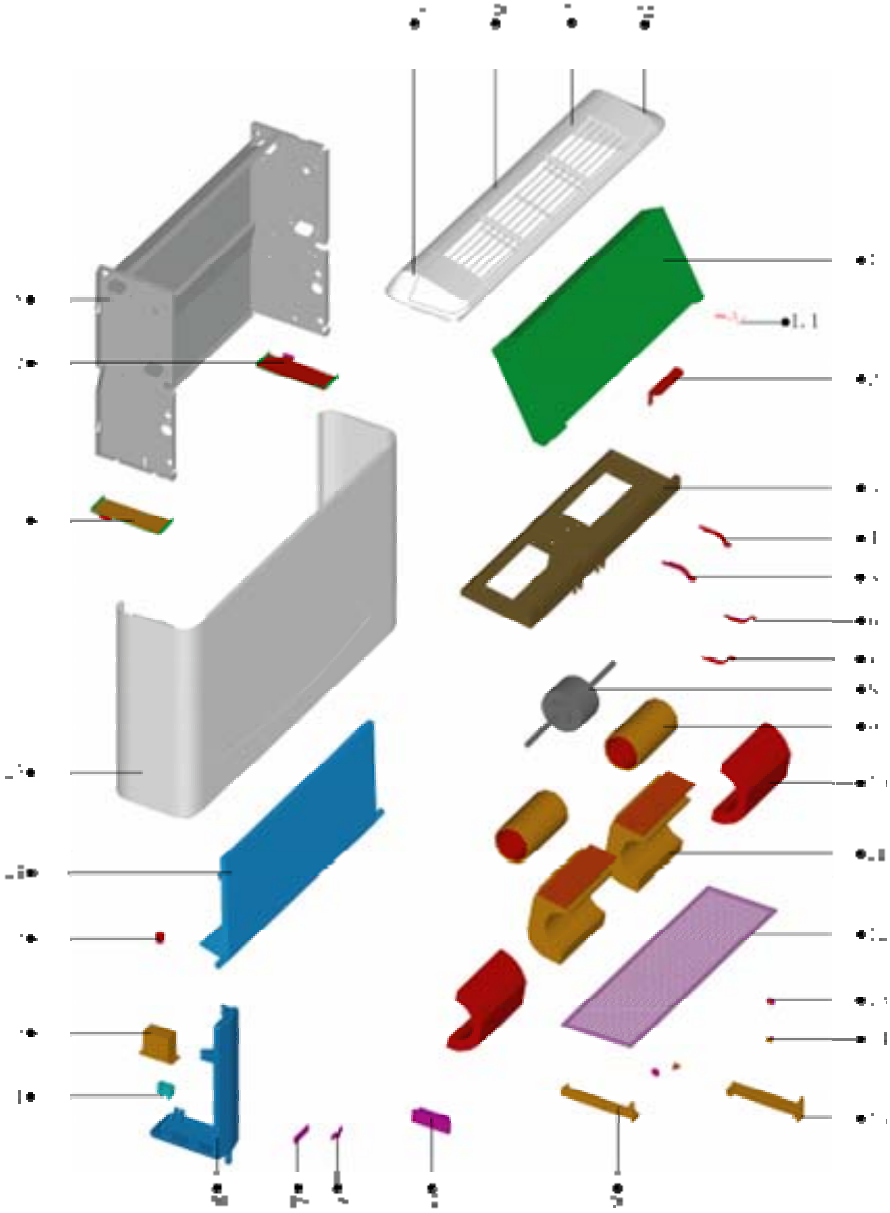

No.	Part Name	Quantity		No.	Part Name	Quantity
1	Evaporator ass'y	1		17	Wire joint,7p	1
1.1	Temp.sensor ass'y	1		18	Wire clamp	1
2	Strengthen board	1		19	Wire joint	1
3	Middle beam	1		20	Drainage pan ass'y	1
4	Fixing board	1		21	Motor capacitor	1
5	Fixing board	1		22	Capacitor box	1
6	Fixing board	1		23	Seal stopper	1
7	Fixing board	1		24	Drainage pan	1
8	Motor	1		25	Cabinet ass'y	1
9	Fan	2		26	Right sealed board ass'y	1
10	Volute shell	2		27	Left sealed board ass'y	1
11	Volute shell	2		28	Base	1
12	Filter	1		29	Left cover seat ass'y	1
13	Filter bracket	2		30	Louver ass'y	1
14	Filter bracket	2		31	Louver ass'y	2
15	Filter bracket	1		32	Right cover seat ass'y	1
16	Filter bracket	1				

MKH2-450, MKH2-500

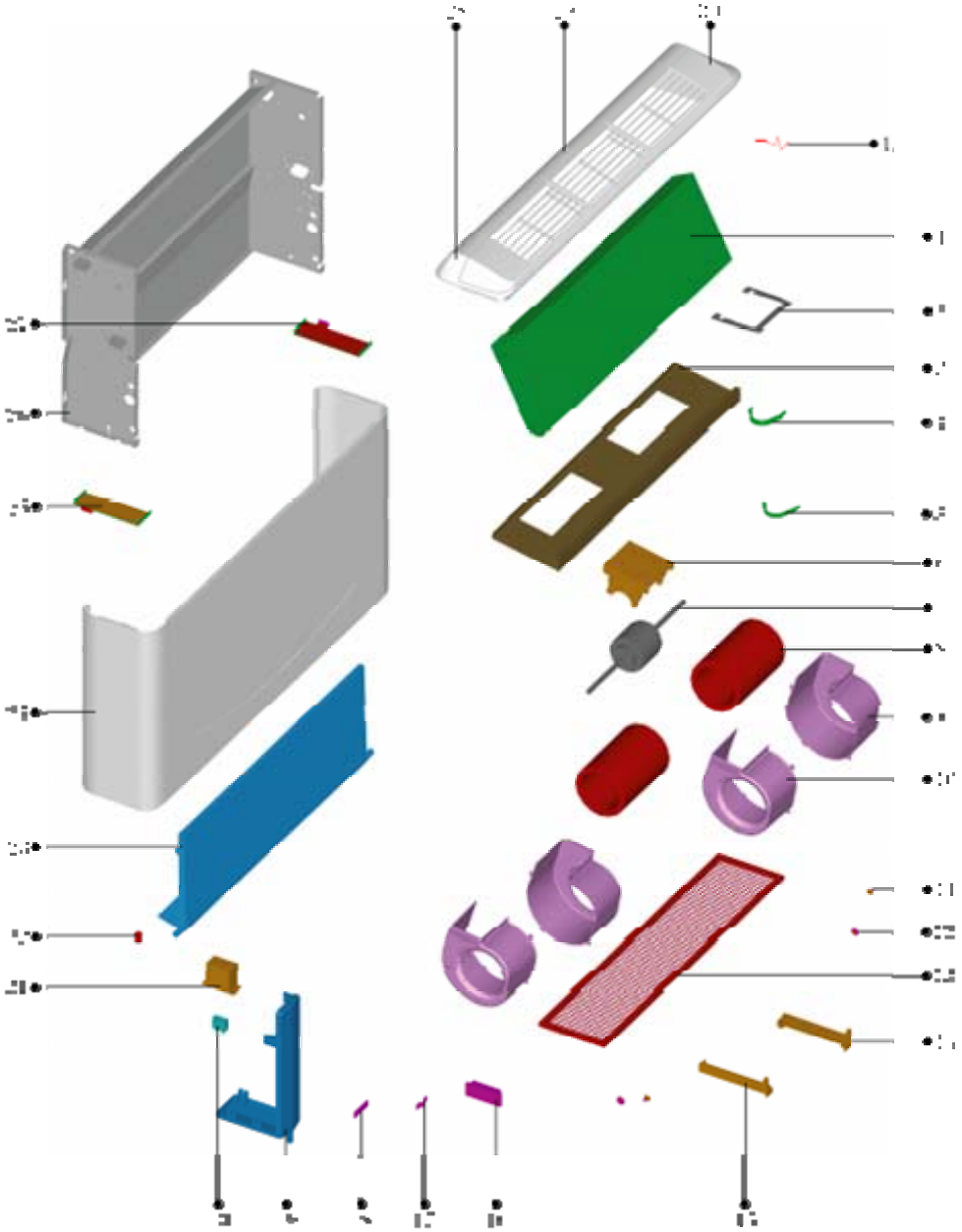

No.	Part Name	Quantity	No.	Part Name	Quantity
1	Evaporator ass'y	1	16	Wire joint,7p	1
1.1	Pipe temp. sensor	1	17	Wire clamp	1
2	Board	1	18	Wire joint	1
3	Middle beam	1	19	Drainage pan ass'y	1
4	Motor clamp	1	20	Motor capacitor	1
5	Motor clamp	1	21	Capacitor box	1
6	Motor bracket	1	22	Seal stopper	1
7	Motor	1	23	Drainage pan	1
8	Fan	2	24	Cabinet ass'y	1
9	Left volute shell	2	25	Left sealed board ass'y	1
10	Volute shell	2	26	Base	1
11	Filter bracket	2	27	Right sealed board ass'y	1
12	Filter bracket	2	28	Left cover seat ass'y	1
13	Filter	1	29	Louver ass'y	3
14	Filter bracket	1	30	Right cover seat ass'y	1
15	Filter bracket	1			

MKH2-600, MKH2-800, MKH2-900

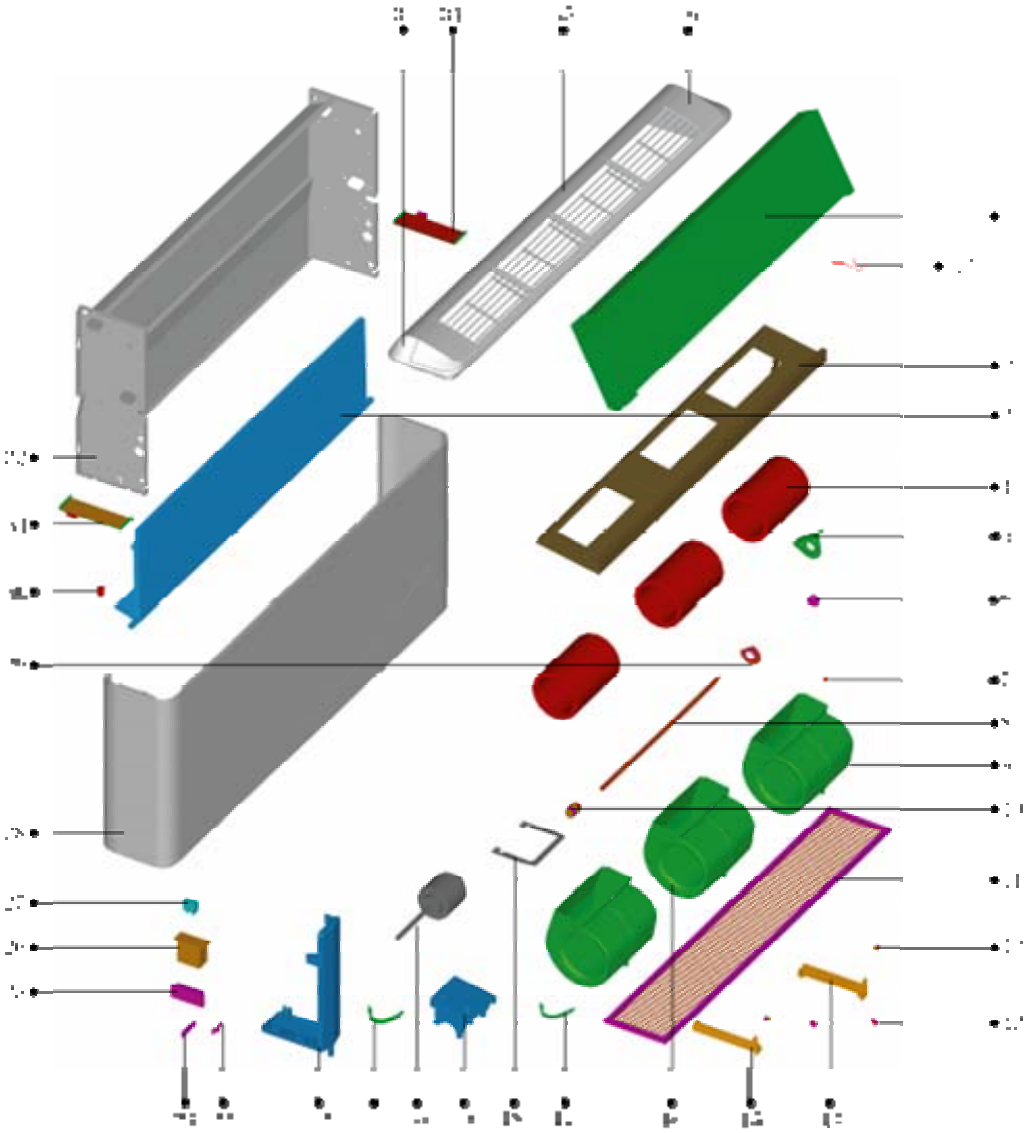

No.	Part Name	Quantity		No.	Part Name	Quantity
1	Evaporator ass'y	1		19	Motor bracket	1
1.1	Pipe temp. sensor	1		20	Motor	1
2	Middle beam	1		21	Motor clamp	1
3	Drainage pan	1		22	Drainage pan ass'y	1
4	Fan	3		23	Wire clamp	1
5	Bearing supporting board	1		24	Wire joint	1
6	Bearing base	1		25	Wire joint,7p	1
7	Bearing	1		26	Capacitor box	1
8	Connecting shaft	1		27	Motor capacitor	1
9	Left volute shell	3		28	Cabinet ass'y	1
10	Coupling	1		29	Bearing Fixing board	1
11	Filter	1		30	Seal stopper	1
12	Filter bracket	2		31	Left sealed board ass'y	1
13	Filter bracket	2		32	Base	1
14	Filter bracket	1		33	Left cover seat ass'y	1
15	Filter bracket	1		34	Right sealed board ass'y	1
16	Volute shell	3		35	Louver ass'y	4
17	Motor clamp	1		36	Right cover seat ass'y	1
18	Board	1				

MKH3-150, MKH3-250

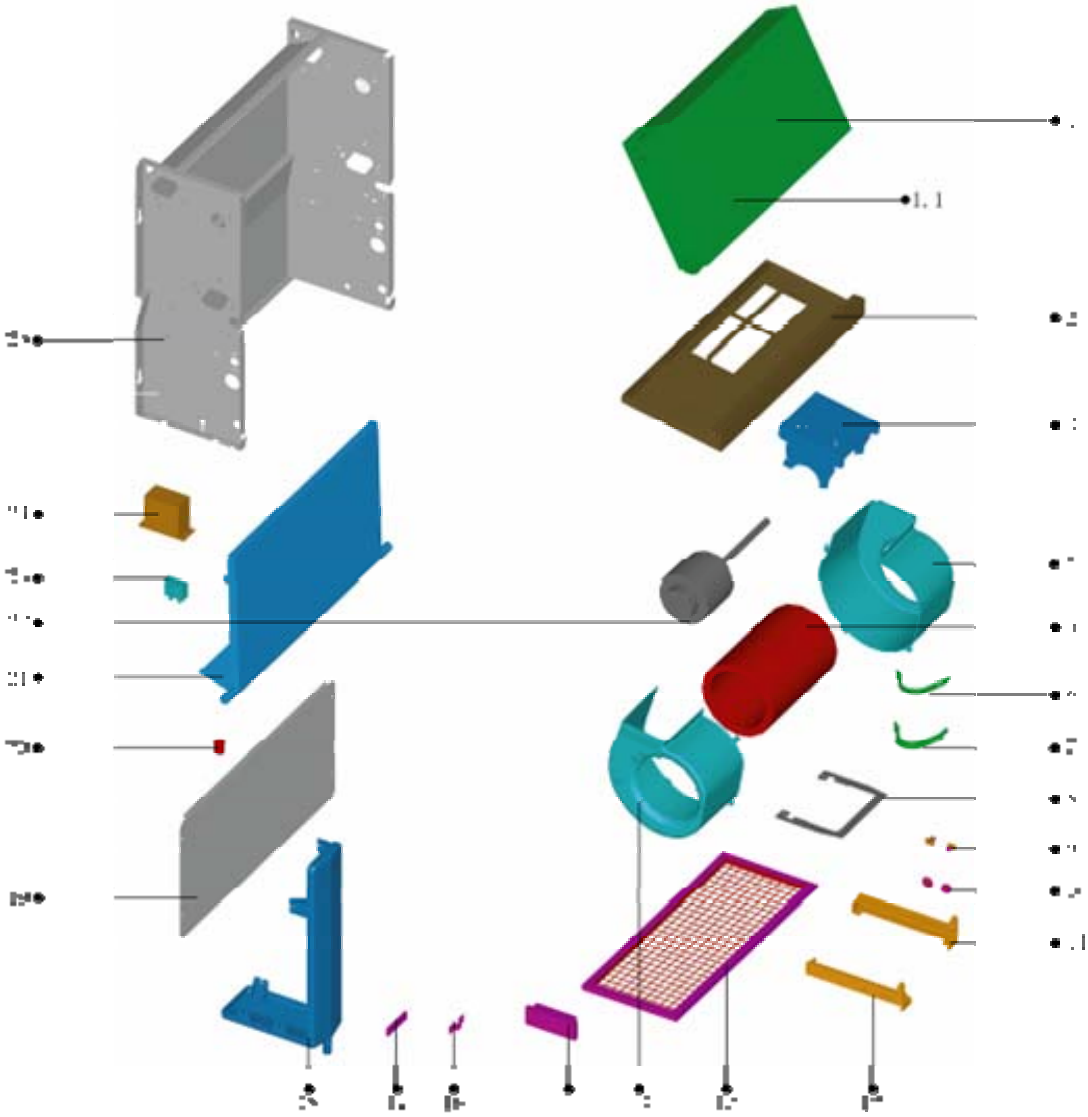

No.	Part Name	Quantity	No.	Part Name	Quantity
1	Evaporator ass'y	1	13	Filter	1
1.1	Pipe temp. sensor	1	14	Volute shell	1
2	Middle beam	1	15	Wire joint,7p	1
3	Motor bracket	1	16	Wire clamp	1
4	Left volute shell	1	17	Wire joint	1
5	Fan	1	18	Drainage pan ass'y	1
6	Motor clamp	1	19	Cover plate ass'y	1
7	Motor clamp	1	20	Seal stopper	1
8	Board	1	21	Drainage pan	1
9	Filter bracket	2	22	Motor	1
10	Filter bracket	2	23	Motor capacitor	1
11	Filter bracket	1	24	Capacitor box	1
12	Filter bracket	1	25	Base	1

MKH3-300, MKH3-400

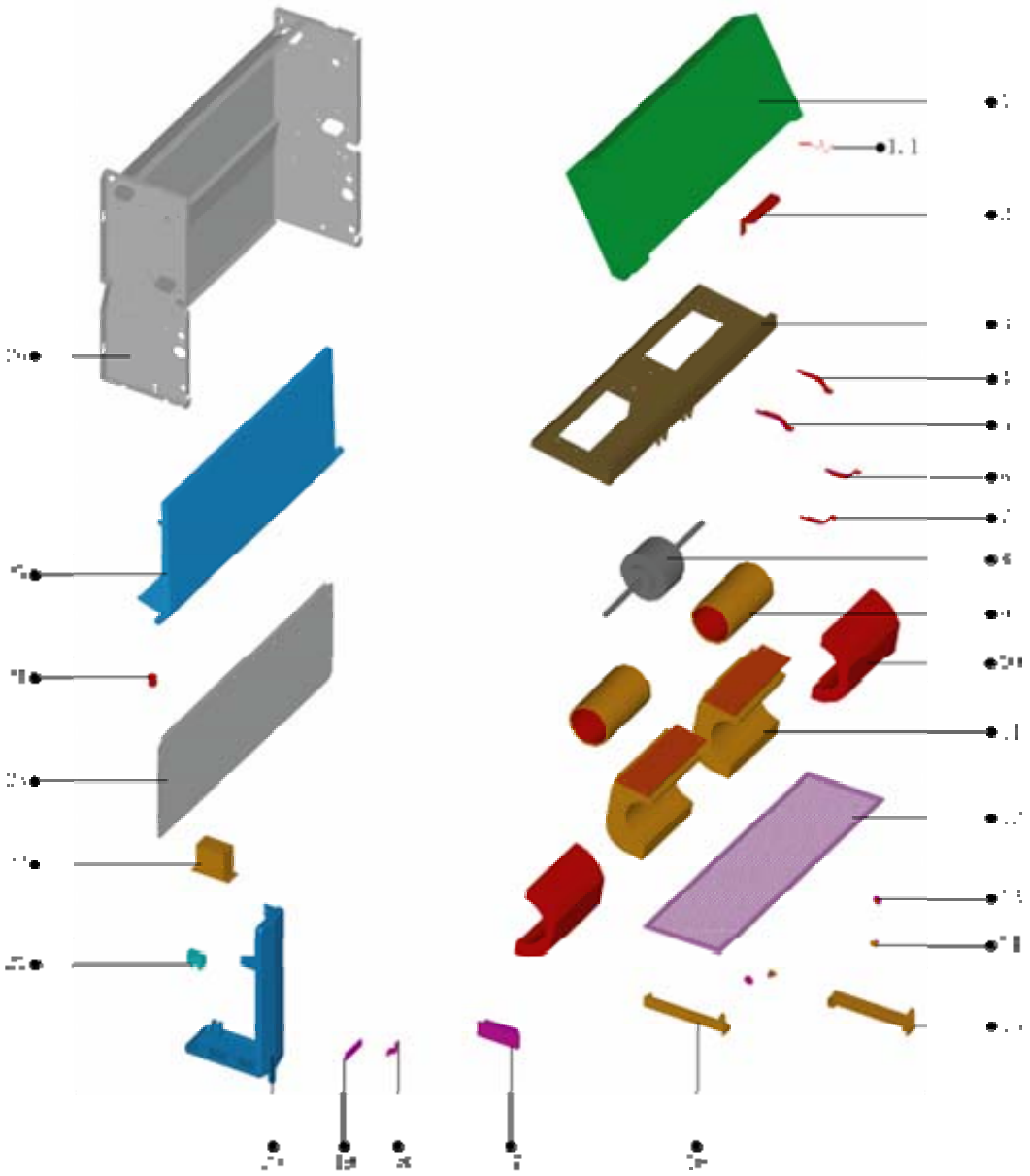

No.	Part Name	Quantity		No.	Part Name	Quantity
1	Evaporator ass'y	1		14	Filter bracket	2
1.1	Temp.sensor ass'y	1		15	Filter bracket	1
2	Strengthen board	1		16	Filter bracket	1
3	Middle beam	1		17	Wire joint,7p	1
4	Fixing board	1		18	Wire clamp	1
5	Fixing board	1		19	Wire joint	1
6	Fixing board	1		20	Drainage pan ass'y	1
7	Fixing board	1		21	Motor capacitor	1
8	Motor	1		22	Capacitor box	1
9	Fan	2		23	Cover plate ass'y	1
10	Volute shell	2		24	Seal stopper	1
11	Volute shell	2		25	Drainage pan	1
12	Filter	1		26	Base	1
13	Filter bracket	2				

MKH3-450, MKH3-500

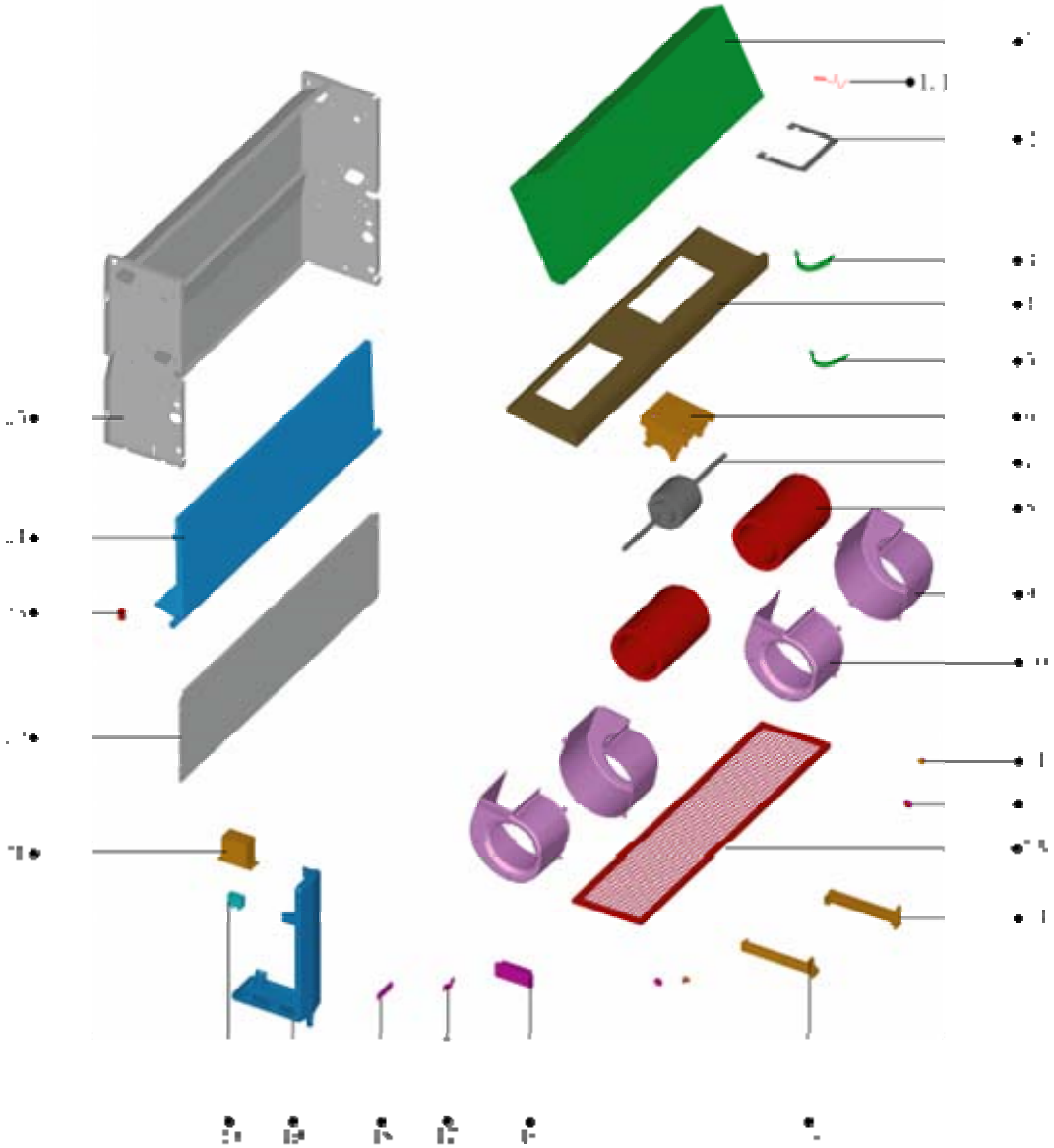

No.	Part Name	Quantity		No.	Part Name	Quantity
1	Evaporator ass'y	1		13	Filter	1
1.1	Pipe temp. sensor	1		14	Filter bracket	1
2	Board	1		15	Filter bracket	1
3	Motor clamp	1		16	Wire joint,7p	1
4	Middle beam	1		17	Wire clamp	1
5	Motor clamp	1		18	Wire joint	1
6	Motor bracket	1		19	Drainage pan ass'y	1
7	Motor	1		20	Motor capacitor	1
8	Fan	2		21	Capacitor box	1
9	Left volute shell	2		22	Cover plate ass'y	1
10	Volute shell	2		23	Seal stopper	1
11	Filter bracket	2		24	Drainage pan	1
12	Filter bracket	2		25	Base	1

MKH3-600, MKH3-800, MKH3-900

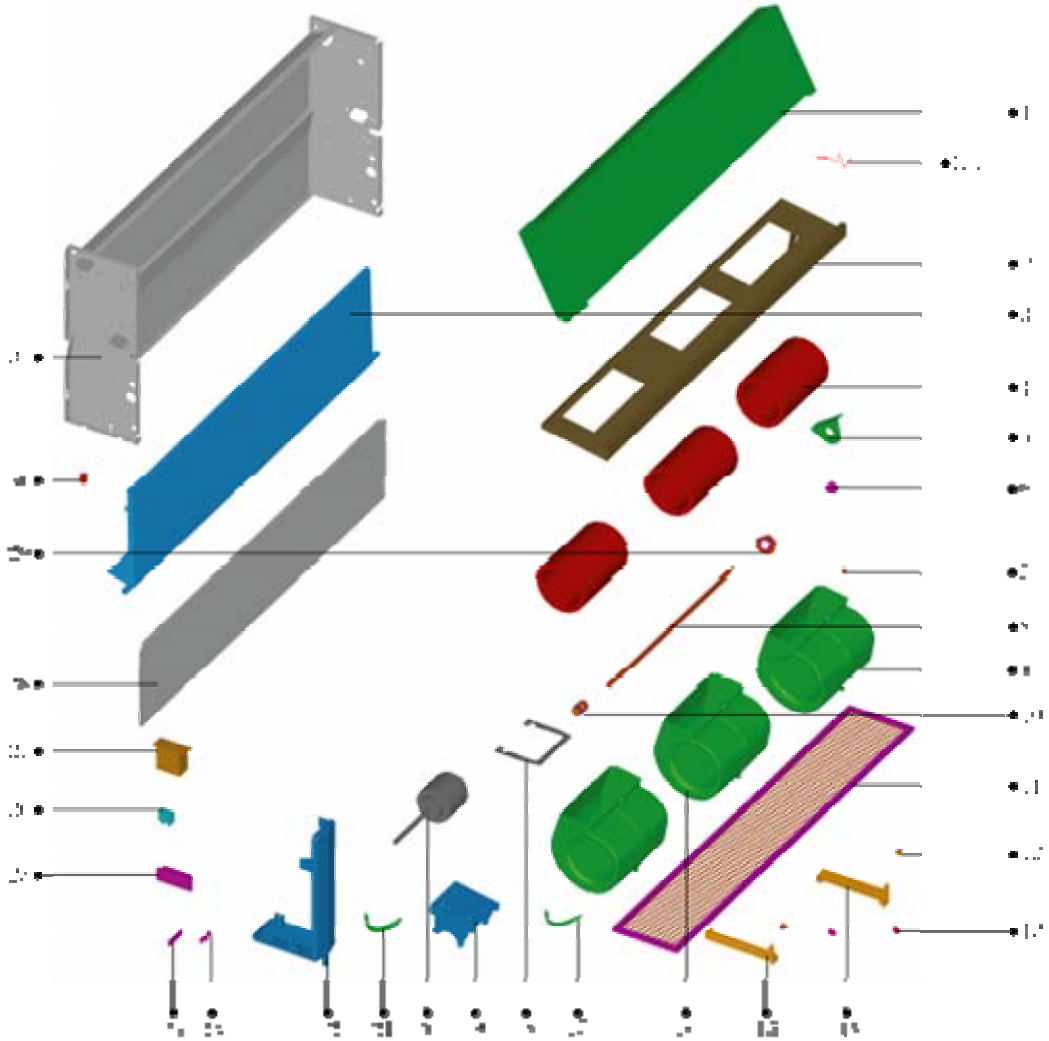

No.	Part Name	Quantity	No.	Part Name	Quantity
1	Evaporator ass'y	1	16	Volute shell	3
1.1	Pipe temp. sensor	1	17	Motor clamp	1
2	Middle beam	1	18	Board	1
3	Drainage pan	1	19	Motor bracket	1
4	Fan	3	20	Motor	1
5	Bearing supporting board	1	21	Motor clamp	1
6	Bearing base	1	22	Drainage pan ass'y	1
7	Bearing	1	23	Wire clamp	1
8	Connecting shaft	1	24	Wire joint	1
9	Left volute shell	3	25	Wire joint,7p	1
10	Coupling	1	26	Motor capacitor	1
11	Filter	1	27	Capacitor box	1
12	Filter bracket	2	28	Cover plate ass'y	1
13	Filter bracket	2	29	Bearing Fixing board	1
14	Filter bracket	1	30	Seal stopper	1
15	Filter bracket	1	31	Base	1

Part 9 Control

Wired controller: KJR-15B/E(P)

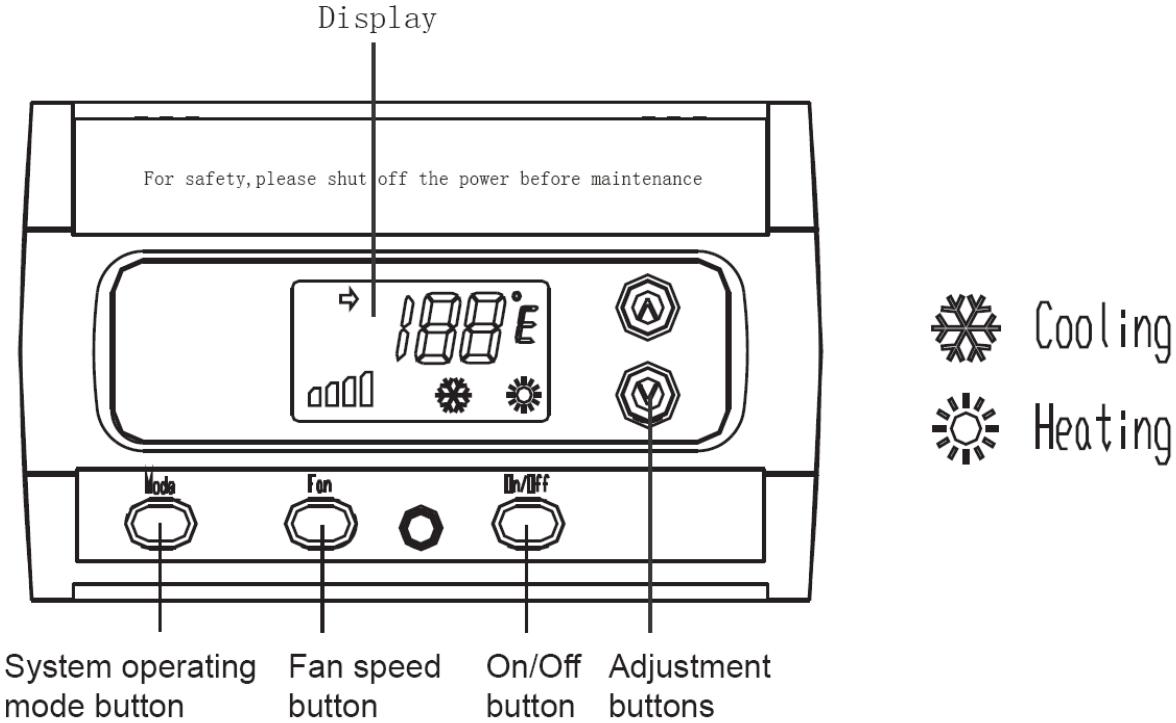

Features:
System operating mode button: heat, cool or fan
Pan speed button: low, middle or high
On/off button: on or off
Temperature display in ℉ or ℃

Use condition:
Electrical range
Input voltage: 220V~; output voltage: 220V~
Temperature and Humidity Range:
Temperature: -15℃～＋43℃
Humidity: RH40%~RH90%

Operation of the key-press:

1. Key-press for fan speed
   It is used to change the fan speed;
   Press the key continuously, the LCD display the corresponding sign to switch back and forth, as the following order.
2. Key-press for mode
   Press it for select the operation mode;
   Press the key continuously, the LCD display the corresponding sign, as the figure below.
3. Key-press for on/off
   Press it to select to turn off the unit and FAN mode;
   These two modes don′ t display on the LCD.
4. Key-press for "▲" and "▼"

- Except the select Contact surface of temperature pattern, when you press the "▲" once, the setting temperature increases progressively 1 degree. When the temperature is up to 30℃, Even if continue to press this key, the setting temperature will not increase any longer.
- Display when the temperature increases progressively as the following order:

  8→ 9→ 10 … →32（℃）
  46 →48→50 … →89（℃）

- Except the Contact surface of temperature pattern select, when you press the "▼" once, the setting temperature decreases progressively 1 degree. When the temperature falls to 46 C, Even if continue to press this key, the setting temperature will not decrease any longer.

- Display when the temperature decreases progressively as the following order:

  32 →31→ 30 … → 8（℃）

  89 → 87→ 86… → 46（℃）
- After the power is on, press both the “▲”and “▼” for 3 seconds, enter the select
- Contact surface of Degree Celsius and degree Fahrenheit. Press “▲”and “▼”to select the temperature pattern:

  C ⇄ F
- At the same time as selection is done, press “▲”or “▼”for 3 seconds, quit the select contact surface of temperature pattern, back to the current temperature display page.
- Press the “▲”or “▼” for 2 seconds, the numbers keeping get up or get down. If no key has been pressed in 2 seconds, the system will turn back to the current temperature display, the figure “→”will disappear.

5. Explanation of function

- Summarization of controlled objects of each part 3-way valve (quantity:2)
- In cooling or heating mode, the thermostat Judges whether to send the 3-way valve signal（220V AC）according to the Current and setting temperature. No signal of the 3-way valve is put out when the power is off.
- Fan motor
  In cooling, heating or FAN mode, the fan motor has 3 speeds, optional:
  HIGH, MIDDLE,LOW （220V AC）. No signal when the power is off.
- Thermostat temp sensor(T1)
  When check that the input voltage range of the indoor T1 temperature is out of 0.05～4.95V,it is considered that the sensor is open-circuit or short-circuit, the 3-way valve and the fan motor stop. The sensor displays
  E1, shows that any key is ineffective.
  When the voltage recovers in the range of 0.05～4.95V, error E1 released, the 3-way valve and the fan motor signal get back to the former condition, the press-key is effective.

Explanation of mode function:

- FAN
  Only FAN mode. In this mode, fan motor signal is sent out (optional: HIGH, MIDDLE,LOW);
- COOLING
  When in cooling mode, the thermostat Judges whether to send the 3-way valve signal according to the Current and setting temperature. the 3-way valve signal will be sent out only in this situation whenT1(Current temperature)-Ts(setting temperature) ≥2℃.
- HEATING
  When in heating mode, the thermostat Judges whether to send the 3-way valve signal according to the Current and setting temperature. the 3-way valve signal will be sent out only in this situation when Ts(setting temperature) -T1(current temperature) ≥2℃.
- Stopping the system
  When the system is off, the thermostat will not send out 3-way valve signal.

Explanation of fan motor function

- In the heating or cooling mode, the corresponding signals in the HIGH, MIDDLE, LOW level should be consistent with the 3-way valve signals of the corresponding pattern.
- Set to FAN mode for FAN only